YUFENG ELECTRIC CO., LTD.

Address：No.16 Zhongfang Road, Zhongfang Industrial zone, Shanqian Village, Bei Baixiang Town,Yueqing,Wenzhou, Zhejiang Province
Telephone：0086-577-61717596　0086-577-57111978　0086-577-61717591
Fax：0086-577-61717591
Email：manager@cnyufeng.cn
Website：http://www.chyf.com
http://www.cnyufeng.cn

Brands Under **YUFENG ELECTRIC**

CYUFE　CHYF

- The company reserves the right to the interpretation of all content in the manual, Please feel free to contact us for more details
- Our technical staff shall provide best service to you sincerely, If the pictures is different from the real objects, Please refer to real object
- Unauthorized Use, Prohibited to copy all or part of the information
- There's no prior notice if any change, Sincerely hope that this manual can bring convenience to you
- Products research and development, Continuous innovation of technology……

(C) YUFENG ELECTRIC CO., LTD. All Rights Reserved. Cherish Resources, Be Kind To The Environment.

CHYF®

YUFENG ELECTRIC

Medium High Voltage Circuit Breaker Series

PRODUCT
SELECTION MANUAL

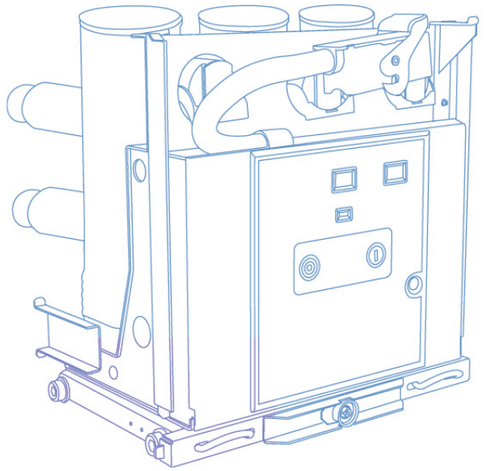

YUFENG ELECTRIC CO., LTD.

About Us

Yufeng Electric Co,Ltd was founded in 2001 in the capital of electrical appliances-- Yueqing, Zhejiang Province. As a professional manufacturer and exporter, Yufeng specializes in components of switchgears from 7.2KV to 40.5 KV, such as earthing switch, interlocking device, insulating parts, chassis truck,vacuum circuit breaker and so on.

Covering an area of 10000 square meters, Yufeng now has over 320 staff, 25 technicians and total assets of 150 million RMB. We adhere to high starting point, high quality and high level of "three high" strategy and excellent management system, which helps us develop steadily. Passed ISO9001:2001, Yufeng gained praise in both domestic and international market for its good quality, best price and timely delivery.

In the future, Yufeng will never stop pursuing innovation and refinement to create values for customers and society, and strive to make it into a world-famous enterprise with model operation, scientific management and international brand.

CONTENTS

Medium High Voltage Circuit Breaker Series

002-003 ZN63(VS1)-12 Indoor High Voltage Handcart Vacuum Circuit Breaker
004-005 ZN63(VS1)-12 Indoor High Voltage Side-Mounted Vacuum Circuit Breaker
006-007 ZN63(VS1)-12 Indoor High Voltage Fixed Vacuum Circuit Breaker
008-009 ZN63(VS1)-12 Indoor High Voltage Solid Vacuum Circuit Breaker
010-011 ZN73A-12 Indoor High Voltage Permanent Magnet Vacuum Circuit Breaker
012-013 ZN63(VS1)-24 Indoor High Voltage Handcart Vacuum Circuit Breaker
014-015 VSG/C-24 Indoor Side Mounted High Voltage Vacuum Circuit breaker
016-017 ZN63(VS1)-40.5 Indoor Side Mounted High Voltage Vacuum Circuit Breaker
018-019 ZN85-40.5 Indoor Handcart Vacuum Circuit Breaker
020-020 PT handcart 630A
021-021 ZN85-40.5 PT handcart
022-022 ZN85-40.5D Isolation handcart
023-023 ZN85-40.5 Isolation handcart insulation cylinder type
024-024 630A Isolation handcart insulation cylinder type
025-025 Metering trolley 630A
026-026 Metering trolley with measuring cylinder 630A
027-027 Customized fuse handcart 630A（XRNT）
028-028 Fuse handcart 630A（XRNP）
029-029 Duckbill PT handcart
030-031 ZW32-12(G)/T Outdoor High Voltage Vacuum Circuit Breaker
032-033 ZW32M-12 Outdoor Permanent Magnet High Voltage AC Vacuum Circuit Breaker
034-035 ZW32-12F Outdoor High Voltage VacuumCircuit Breaker (Watchdog Switch)
036-037 ZW32-24 Outdoor High Voltage Vacuum Circuit Breaker
038-039 ZW43-12(G)/M630-20 Outdoor High Voltage Permanent Magnet Vacuum Circuit Breaker
040-041 ZW8-12 Outdoor High Voltage AC Vacuum Circuit Breaker
042-043 ZW7A-40.5 Outdoor High Voltage AC Vacuum Circuit Breaker
044-045 ZW20A-12 Outdoor High Voltage Vacuum Circuit Breaker
046-047 ZW20F-12 Outdoor High Voltage Vacuum Circuit Breaker (Watchdog Switch)
048-049 FZW28-12(FFK) Outdoor Bo undary Vacuum Load Switch
050-051 FKN12-12/FKRN12-12D Indoor High Voltage Gas Pressure Load Switch
052-053 FZN25-12DL/T630-20 FZRN25-12DL/T200-31.5 Indoor AC High Voltage Vacuum Load Switch
054-145 GN19-12 Indoor High Voltage Disconnector
056-057 GN30-12 Indoor Rotary High Voltage Disconnector
058-061 ZN85 propulsion mechanism
062-069 Embedded Pole
068-069 Tulip contact series
070-074 Contact arm series
074-080 F10 auxiliary switch

CHINA YUFENG ELECTRIC CO.,LTD.

Production Workshop

Fine business to meet customer' s needs ,make reliable products with the good quality and supply honest and good service.

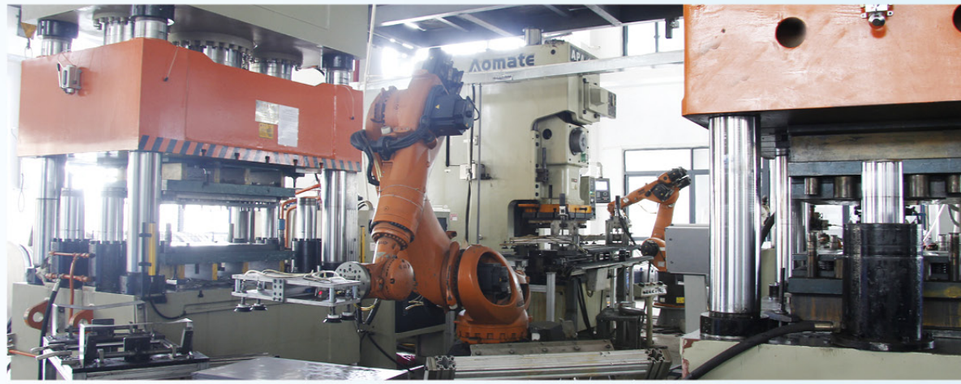

Yufeng company looks forward to working with every customer to create a brilliant tomorrow.

Power driven civilization progress, the world is green bloom; The pursuit of excellence, technology to lead the future...

CHINA YUFENG ELECTRIC CO.,LTD.

Production Workshop

Pursue refinement to meet customers' needs, make reliable products with high quality, and supply honest and good service.

X-ray perspective testing(host computer)

X-ray perspective testing(console)

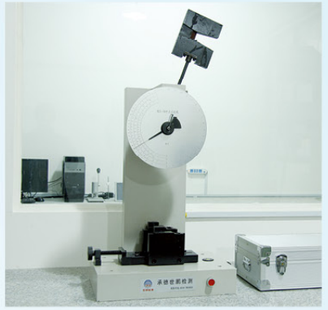

Impulse strength testing machine

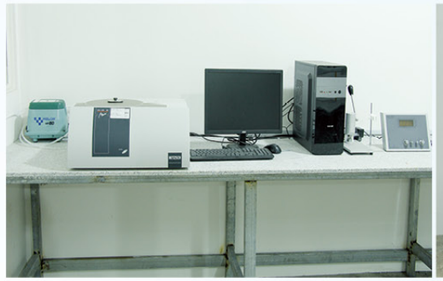

Raw materials analysis lab

High & low temperature testing box

Salt mist test machine

Meticulously Make Professional Quality

With ingenuity, Yufeng manufactures high-quality products and provide sincere service.

Testing Equip-ment

Horizontal and vertical burning tester

Horizontal and vertical burning tester

ZN63(VS1)-12

Indoor High Voltage Handcart Vacuum Circuit Breaker

General

ZN63(VS1)–12 indoor high voltage handcart vacuum circuit breaker is applied to 12KV, three–phase, AC50Hz . It can provide control and protection for industrial and mining enterprises, power plants and substations, electrical facilities, and is suitable for frequent operation. The operating mechanism is integrated with the circuit breaker, and the design can be used as a fixed installation unit. It can also be a special propulsion mechanism to form a handcart unit. The main loop adopts the integral solid pole to realize the miniaturization, high reliability and free–maintenance of the circuit breaker. It can be used in KYN28A–12 (GZS) and other center–mounted handcart switchgears.The fixed type could also be used in the XGN series fixed switchgear.

Technical specification

No.	Item	Unit	Data			
1	Rated voltage	KV	12			
2	Rated frequency	Hz	50			
3	Rated lightning impulse withstand voltage (peak)	KV	75			
4	Rated short–time power frequency voltage (1 min)	KV	42			
5	Rated current	A	630、1250	630、1250	1250、1600 2000、2500	1600、2000 2500、3150 4000、5000
6	Rated short circuit breaking current	KA	20	25	31.5	40
7	Rated short circuit making current (peak)	KA	50	63	80	100
8	Rated short circuit duration	S	4			
9	Rated operating sequence		O–0.3s–CO–180s–CO		O–180s–CO–180s–CO (40KA)	
10	Rated single / back to back capacitor bank breaking current	A	630/400			
11	Rated short circuit current breaking time	Times	30			
12	Opening time	ms	35~70			
13	Closing time	ms	20~50			
14	Mechanical life	Times	10000			
15	Rated energy storage and operating voltage	V	AC220/110DC220/110			
16	Contact stroke	mm	11 ± 1			
17	Contact overtravel	mm	3.5 ± 0.5			
18	Average closing speed	m/s	0.5~0.8			
19	Average opening speed	m/s	0.9~1.2			
20	Contact closing bounce time	ms	≤2			
21	Three–phase opening, closing asynchronous	ms	≤2			
22	The main circuit resistance	μ Ω	≤50 (630A)≤45 (1250A) ≤35 (1600~2000A)≤25 (more than 2500)			

Outline overall and installing dimensions

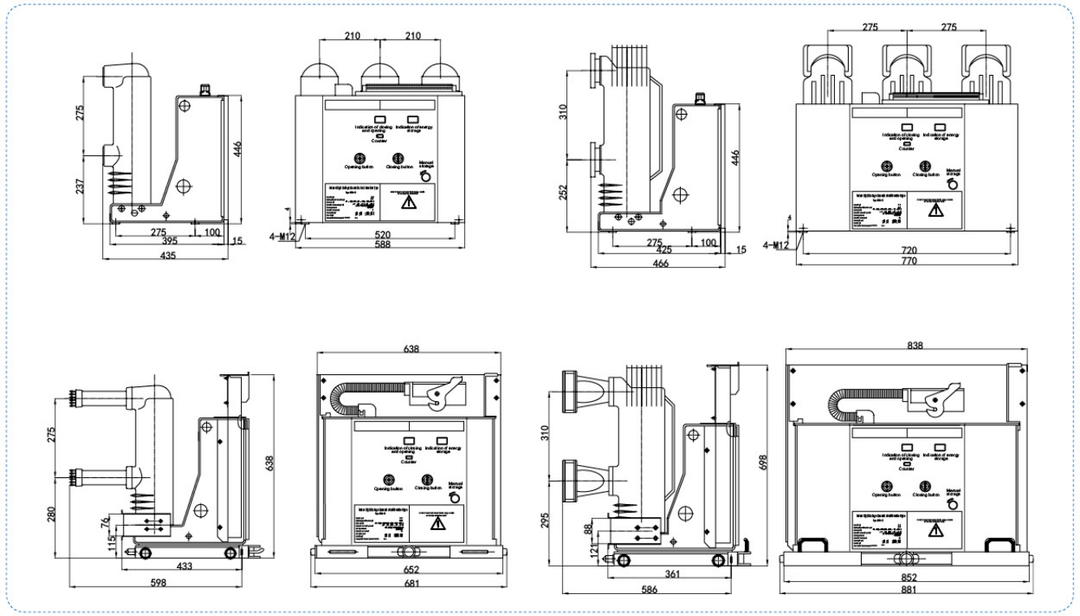

ZN63(VS1)-12

Indoor High Voltage Side-Mounted Vacuum Circuit Breaker

General

ZN63(VS1)–12 indoor high voltage side–mounted vacuum circuit breaker is suitable for power system with 50Hz, 12KV rated voltage and three–phase. It is used for protection and control. Due to the special advantages of vacuum circuit breakers, it is especially suitable for places that require frequent operation under rated current or multiple short–circuit currents.

ZN63(VS1)–12 side–mounted vacuum circuit breaker adopts fixed installation and is mainly used for fixed switchgear. The circuit breaker can be used alone or in ring power supply, box type or various non–standard power supply systems.

Technical specification

No.	Item		Unit	Data	
1	Rated voltage		KV	12	
2	Rated insulation level	Rated lightning impulse withstand voltage (peak)	KV	75 (Phase to phase, to earth)/80 (Between open contacts)	
		1 min power frequency withstand voltage	KV	42 (Phase to phase, to earth)/48 (Between open contacts)	
3	Rated short circuit breaking current		KA	25	31.5
4	Rated current		A	630 1250	630 1250 1600
5	Rated thermal stability current (RMS)		KA	25	31.5
6	Rated dynamic stability current (peak)		KA	63	80
7	Rated short circuit making current		KA	63	80
8	Rated short circuit current breaking time		Times	50	
9	Secondary circuit operating frequency withstand voltage		V/min	2000	
10	Rated operating sequence			O–0.3s–CO–180s–CO	
11	Rated thermal stability time		S	4	
12	Rated single / back to back capacitor bank breaking current		A	630/400	
13	Mechanical life		Times	20000	

Outline overall and installing dimensions

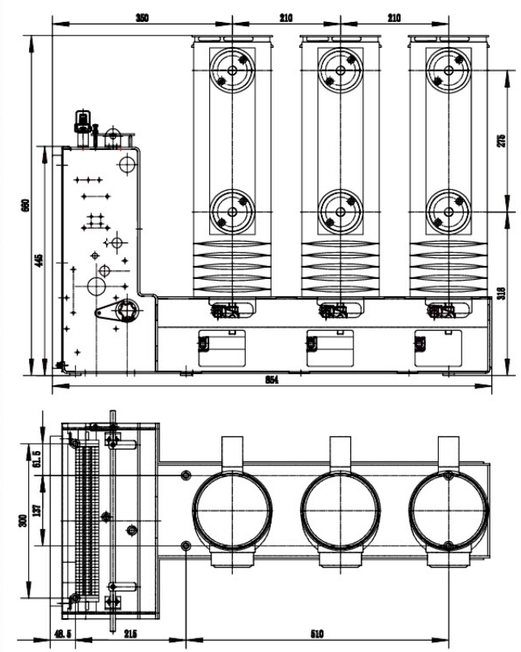

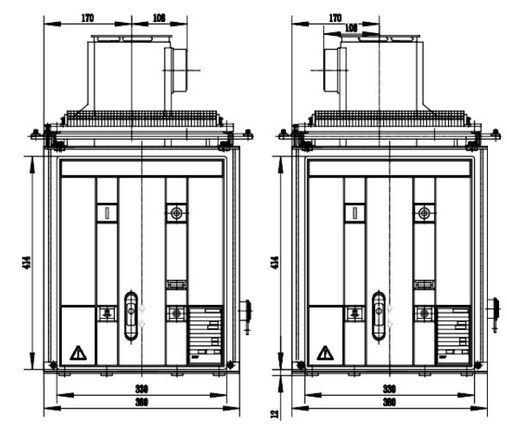

Right outlet

Left outlet

Outline of 12KV fixed side–mounted VS1 (Plastic panel 380 wide)vacuum circuit breaker

ZN63(VS1)-12

Indoor High Voltage Fixed Vacuum Circuit Breaker

General

ZN63(VS1)–12 indoor high voltage fixed vacuum circuit breaker is suitable for three–phase, AC50Hz with 12KV rated voltage. It can provide control and protection for industrial and mining enterprises, power plants and substations, and electrical facilities, and is suitable for frequent operation. The operating mechanism is integrated with the main body of the circuit breaker, and the design can be used as a fixed installation unit. It can also be special propulsion mechanism to form a handcart unit. The main loop adopts the integral solid pole to realize the miniaturization, high reliability and free–maintenance of the circuit breaker. It can be used in KYN28A–12 (GZS) and other center–mounted handcart switchgears. The fixed type could also be used in the XGN series fixed switchgear.

Technical specification

No.	Item		Unit	Data			
1	Rated voltage		KV	12			
2	Rated frequency		Hz	50			
3	Rated insulation level	1 min power frequency withstand voltage	KA	To earth/phase to phase 42/48			
		Lightning impulse withstand voltage (peak)		To earth/phase to phase 75/85			
4	Rated short circuit breaking current		KA	20	25	31.5	40
5	Rated current		A	630	630	1250	1250
				1250	1250	1600	1600
6	Rated short–circuit withstand current(RMS)		KA	20	25	31.5	40
7	Rated peak withstand current(peak)			50	63	80	100
8	Rated short circuit closing current(peak)			50	63	80	100
9	Rated short circuit current duration		S	4			
10	Mechanical life		Times	20000			
11	Secondary circuit operating frequency withstand voltage (1 min)		V	2000			
12	Rated operating sequence			O–t–CO–tl–CO			

Outline overall and installing dimensions

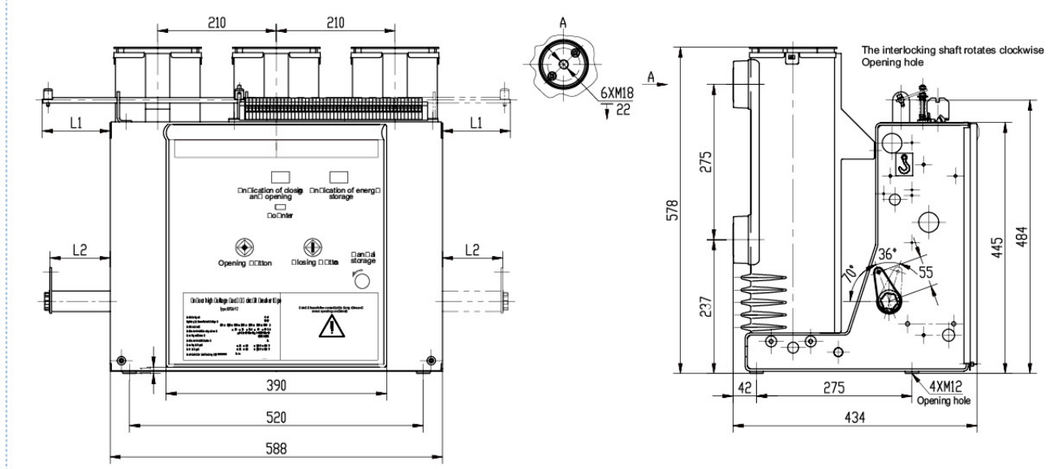

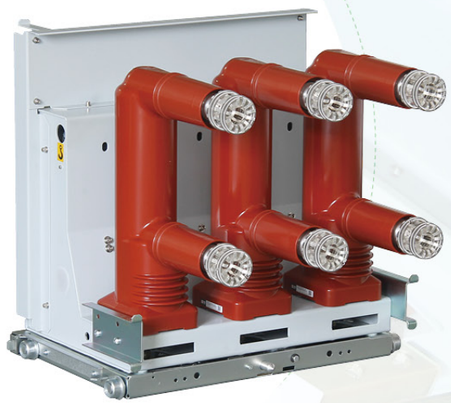

ZN63(VS1)-12

Indoor High Voltage Solid Vacuum Circuit Breaker

General

ZN63(VS1)–12 series indoor high voltage solid vacuum circuit breaker adopts solid insulation structure and advanced epoxy solid sealing technology. Vacuum interrupter, main conductive loop and insulation support are integrated into a solid–sealed pole for the first time.The problem of environment tolerance of vacuum circuit breaker is solved successfully, which makes it more widely used.The integrated solid–sealed pole adopts the self–convection patented ventilation technology, which subtly solves the problem of heat dissipation caused by the solid insulation structure.

ZN63(VS1)–12 series indoor high voltage solid vacuum circuit breaker is the first circuit breaker in China to realize the maintenance–free concept.Its high–life vacuum interrupter and epoxy casting sealing technology ensure maintenance–free integrated solid–sealed poles,and high–reliability permanent magnet operating mechanism ensures maintenance–free operation of the operating mechanism. The electronic control part abandons the traditional auxiliary switch, uses the photoelectric proximity switch, and uses the fully electronic power supply and intelligent control unit to ensure the maintenance–free operation of the electronic control part.

Technical specification

No.	Item		Unit	Data		
1	Rated voltage		KV	12		
2	Max. working voltage		KV	12		
3	Rated current		A	630 1250	630 1250 1600 2000 2500 3150	1250 1600 2000 2500 3150 4000
4	Rated short circuit breaking current (Rated thermal stability current (RMS))		KA	20/25	31.5	40
5	Rated short–circuit current (peak)		KA	50/63	80	100
6	Rated dynamic stability current (peak)		KA	50/63	80	100
7	4S Rated withstand current		KA	20/25	31.5	40
8	Rated insulation level	Power frequency withstand voltage (rated breaking before and after) / 1 min power frequency withstand voltage	KV	To earth 42 (Between open contacts)		
		Impulse withstand voltage(rated breaking before and after)/Lightning impulse withstand voltage (peak)		To earth 75 (Between open contacts)		
9	Rated thermal stability time		s	4		
10	Rated operating sequence			O–0.3S–CO–180S–CO		
11	Mechanical life		Times	20000		
12	Rated short circuit current breaking time		Times	50		
13	Rated operating mechanism closing voltage (DC)		V	AC 、DC 110，220		
14	Actuator voltage of the floodgate (DC)		V	AC 、DC 110，220		
15	Contact stroke		mm	11 ± 1		
16	Overtravel(the length of contact spring compression)		mm	3.5 ± 0.5		
17	Three–phase points,closing phase asynchronous		ms	≤ 2		
18	Contact closing bounce time		ms	≤ 2		
19	Average opening speed		m/s	0.9~1.2		
	Average closing speed		m/s	0.5~0.8		
20	Opening time	Under max.operating voltage	s	≤ 0.05		
21		Under min.operating voltage		≤ 0.08		
22	Closing time		s	0.1		
23	The main circuit resistance of each phase		μ Ω	630 ≤ 50	1250 ≤ 45	
24	Allowed comision thickness for fixed and movable contacts		mm	3		

Outline overall and installing dimensions

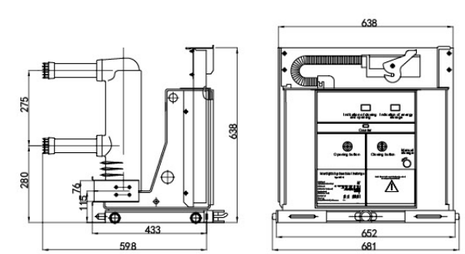

ZN63(VS1)–12/630~1600(800 Cabinet)

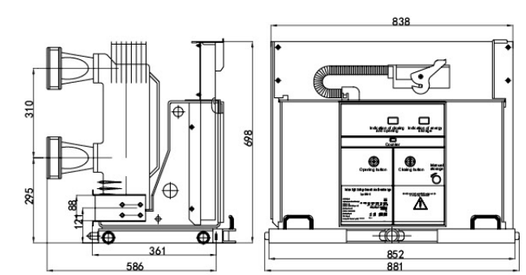

ZN63(VS1)–12/2000~4000(1000 Cabinet)

ZN73A-12

Indoor High Voltage Permanent Magnet Vacuum Circuit Breaker

General

ZN73A–12 indoor high voltage permanent magnet vacuum circuit breaker is suitable for three–phase, AC50Hz with 12KV rated voltage. It can provide control and protection for industrial and mining enterprises, power plants and substations, and electrical facilities. Equipped with permanent magnet operating mechanism developed by our company. For its high reliability and long life, it is especially suitable for the places with bad conditions for example under frequent operation and frequent breaking of short circuit current.

Technical specification

No.	Item		Unit	Data		
1	Rated voltage		KV	12		
2	Rated insulation level	1 min power frequency withstand voltage	KV	42		
		Lightning impulse withstand voltage	KV	75		
3	Rated current		A	630–1250	1250–3150	1250–4000*
4	Rated short circuit breaking current		KA	20	31.5	40
5	Rated short–circuit closing current (peak)		KA	50	80	100
6	Rated dynamic stability current (peak)		KA	50	80	100
7	Rated thermal stability current (RMS)		KA	20	31.5	40
8	Rated short circuit current breaking time		Times	30	30	20
9	Rated thermal stability time		S	4		
10	Rated operating sequence			O–0.3s–CO–180s–CO		
11	Mechanical life		Times	⩾ 50000	⩾ 50000	⩾ 30000 **
12	Permanent magnet mechanism and transmission part mechanical life		Times	⩾ 100000	⩾ 100000	⩾ 100000
13	Rated single capacitor bank breaking current		A	630		
14	Rated back–to–back capacitor bank breaking current		A	400		
15	Rated out–of–step breaking current		KA	12.6	16	

Outline overall and installing dimensions

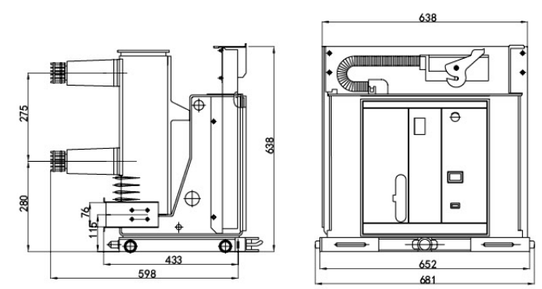

ZN73A–12/630–1600(800 Cabinet)

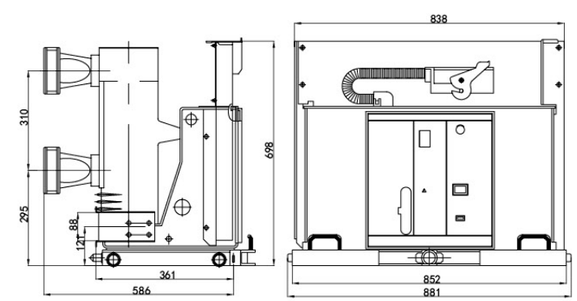

ZN73A–12/2000–4000(1000 Cabinet)

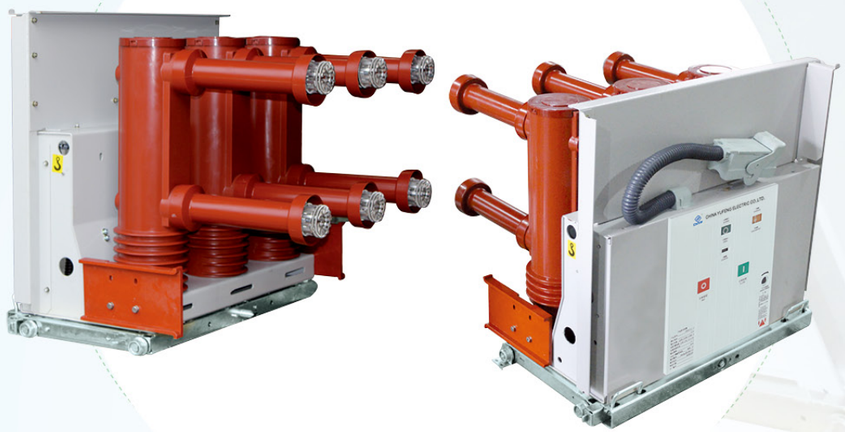

ZN63(VS1)-24

Indoor High Voltage Handcart Vacuum Circuit Breaker

General

VS1–24 indoor high voltage handcart vacuum circuit breaker is suitable for three–phase, AC50Hz with 24KV rated voltage. It can provide control and protection for industrial and mining enterprises, power plants and substations and is especially suitable for high–altitude areas where important loads are interrupted and a place needs frequent operations.

It complies with GB1984–2003 "AC high voltage circuit breaker", DL/T403–2000 "3.6–40.5KV indoor vacuum circuit breaker ordering technical conditions" and related IEC standards, and has reliable interlocking function.

The operating mechanism of the circuit breaker is spring energy storage type, which can be operated by AC or DC energy storage, or can be manually operated.

The circuit breaker can also be equipped with a long–life permanent magnet operating mechanism, which can have a mechanical life of 60,000 times and can be used in the occasion with frequent operation.

The circuit breaker is designed in the form of front and rear sub–mounting structure, which can be used either as fixed mounting unit or as intermediate unit with chassis.

Technical specification

No.	Item	Unit	Data		
1	Rated voltage	KV	24		
2	Rated frequency	Hz	50		
3	Rated current	A	630	1250	1600
4	Rated short circuit breaking current	KA	20	25	31.5
5	Rated short circuit closing current (peak)	KA	50	63	80
6	Rated short circuit duration	s	4		
7	Rated short circuit breaking current breaking time	Times	20		
8	Rated operating sequence		0–0.3s–CO–180s–CO		
9	Rated lightning impulse withstand voltage (Between open contacts)	KV	125		
10	Rated 1 min power frequency withstand voltage (Between open contacts)	KV	65		
11	Closing time	ms	≤ 100		
12	Opening time	ms	≤50		
13	Mechanical life	Times	20000		
14	Rated energy storage and operating voltage	V	∽ 220/110		
15	Break time	ms	≤ 65		
16	Energy storage time	s	≤ 10		

Outline overall and installing dimensions

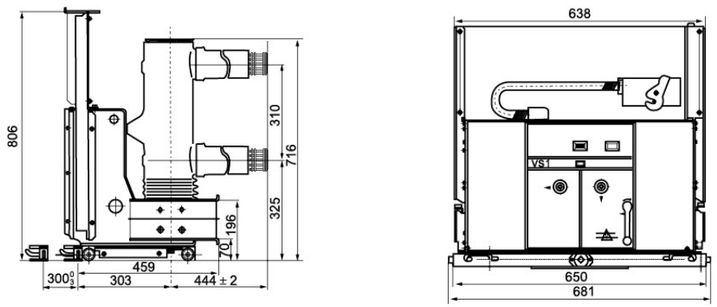

ZN63(VS1)–24/1250(800 Cabinet)

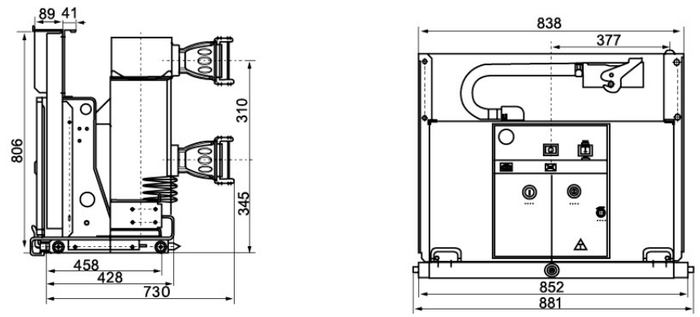

ZN63(VS1)–24/2000–3150(1000 Cabinet)

VSG/C-24

Indoor Side Mounted High Voltage Vacuum Circuit breaker

General

VSG/C–24 series indoor side mounted high voltage vacuum circuit breaker is indoor high voltage switchgear,is suitable for three–phase power systems with a rated voltage of 12 kV and a rated frequency of 50 Hz,as a function of protection and control of electrical appliances, due to the special advantages of vacuum circuit breakers, especially for places requiring frequent operation at rated current or multiple short–circuit currents.
VSG/C–24 series side mounted vacuum circuit breaker is fixedly installed and is mainly used for fixed switchgear. The circuit breaker can be used alone or for ring network power supply, box type or various non–standard power supply systems.

Technical specification

No.	Item		Unit	Data	
1	Rated voltage		KV	24	
2	Rated frequency		HZ	50/60	
3	Rated insulation level	1 min power frequency withstand voltage	KV	65	
		Lightning impulse withstand voltage		125	
4	Rated current		A	630	1250
5	Rated short–circuit breaking current		KA	20	20
				25	
				31.5	
6	Rated short circuit closing current (peak)		KA	50	
				63	
				80	
7	Contact resistance per phase			≤50	≤45
8	Contact opening distance		mm	12 ± 1	
9	Overtravel		ms	3.5 ± 0.5	
10	Contact closing bounce time		ms	≤ 2	
11	Three phase opening and closing not synchronism		ms	≤ 2	
12	Opening time		ms	20–50	
13	Closing time		ms	30–70	
14	Average opening time		m/s	1.1–1.6	
15	Average closing time		m/s	0.5–1.0	

Outline overall and installing dimensions

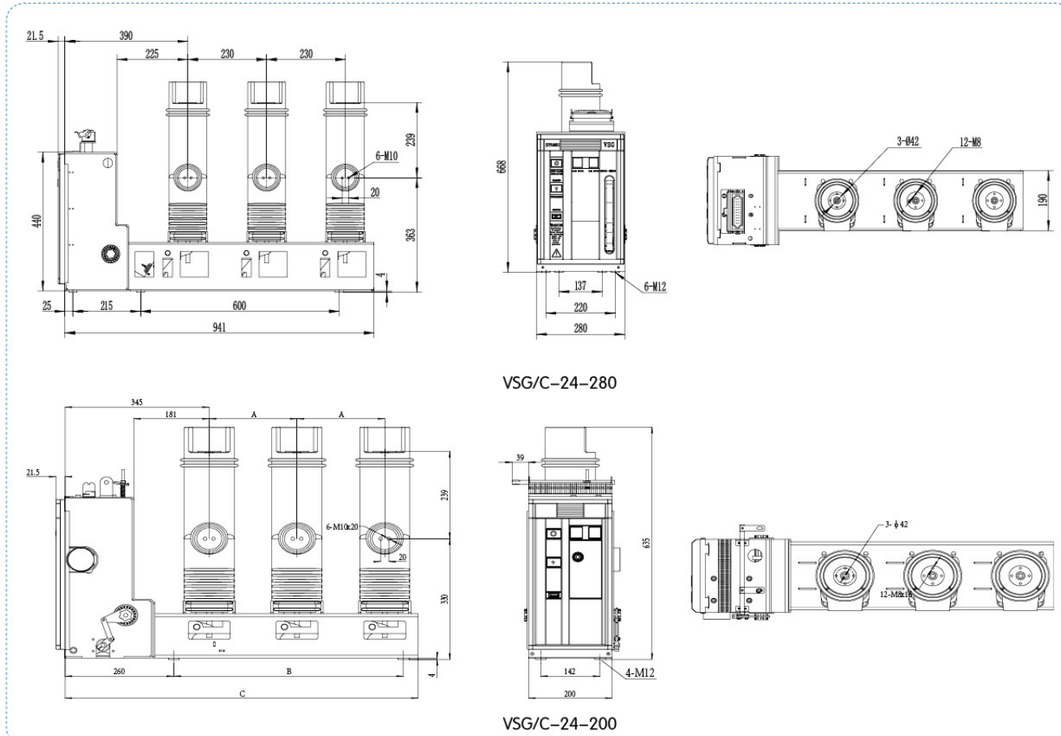

ZN63(VS1)-40.5

Indoor Side Mounted High Voltage Vacuum Circuit Breaker

General

ZN63(VS1)–40.5 indoor AC high–voltage vacuum circuit breaker (hereinafter referred to as circuit breaker) is suitable for three–phase AC 50Hz, 40.5kV indoor handcart switchgear, and can be used as protection and control for industrial and mining enterprises, power plants and substations. Equipment, and suitable for places with frequent operations.

The performance of this product conforms to the national standard GB1984–2003 "AC High Voltage Circuit Breaker", JB3855 "3.6–40.5KV Indoor AC High Voltage Vacuum Circuit Breaker", GB/T11022–1999 "Common Technical Requirements for High Voltage Switchgear and Control Equipment Standards" and IEC62271–100 and other standards.

Technical specification

No.	Item		Unit	Data		
1	Rated voltage		KV	40.5		
2	Rated insulation level	1min Power frequency withstand voltage (effective value)	KV	95		
		Lightning impulse withstand voltage (peak value)	KV	185		
3	Rated frequency		Hz	50		
4	Rated current		A	630、1250、1600、2000、2500		
5	Rated short–time withstand current		KA	20	25	31.5
6	Rated peak withstand current		KA	50	63	80
7	Rated short–circuit breaking current		KA	20	25	31.5
8	Rated short–circuit making current (peak value)		KA	50	63	80
9	Rated operating sequence			O–0.3s–CO–180s–CO		
10	Rated short circuit duration		s	4		
11	Break time		ms	≤80		
12	Rated capacitor bank breaking current		A	630/Back to back 400		
13	Rated short–circuit breaking current breaking times		Times	20		
14	Mechanical life		Times	10000		
15	Rated operating voltage		V	–110/~110，–220/~220		
16	Dimensions (WxHxD)		mm	1246x1650x905		
17	weight		kg	466		

Outline overall and installing dimensions

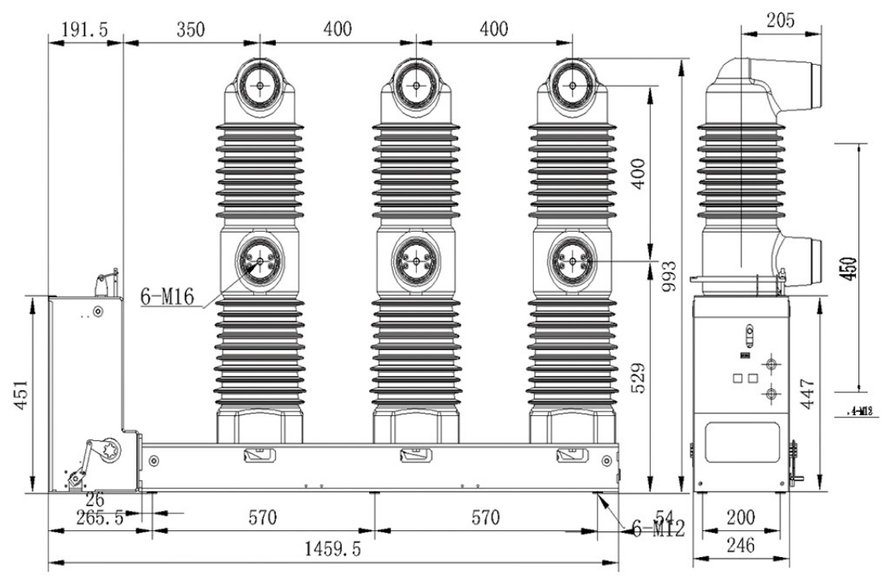

ZN85-40.5

Indoor Handcart Vacuum Circuit Breaker

General

ZN85–40.5/T(3AV3) indoor handcart vacuum circuit breaker is suitable for three–phase, AC50Hz with 40.5KV rated voltage. It can be used for industrial and mining enterprises, power plants and substations as load current and overload current fault current, and is suitable for the occasion with frequent operation.

The circuit breaker adopts an upper and lower arrangement structure to effectively reduce the depth of the circuit breaker. It adopts the composite insulation structure, the three–phase arc extinguishing chamber and the associated electrified body. Separated by three independent epoxy insulation cases, the circuit breaker meets the air distance and creepage requirements under normal operating conditions after the composite insulation structure and it effectively reduces the size of the circuit breaker. The main conductive circuit vacuum interrupter and the dynamic and static conductive connection are installed in the insulation tube, so that the phase to phase distance is only 300mm.The main circuit electrical connections are all fixed connections with high reliability.

Technical specification

No.	Item		Unit	Data			
1	Rated voltage		KV	40.5			
2	Rated current		A	1250		1600	2000、2500
3	Rated short circuit breaking current		KA	25	31.5	25	31.5
4	Rated dynamic stability current (peak)		KA	63	80	63	80
5	4S thermal stability current		KA	25	31.5	25	31.5
6	Rated short circuit closing current (peak)		KA	63	80	63	80
7	Rated short circuit current breaking time		Times	20			
8	Rated operating sequence			O–0.3s–CO–180s–CO			
9	Rated insulation level	1 min power frequency withstand voltage	KV	95			
		Lightning impulse withstand voltage (peak)		185			
10	Mechanical life		Times	10000			
11	Rated single capacitor bank opening and closing current		A	630			
12	Rated back–to–back capacitor bank current		A	400			
13	Rated voltage of energy storage motor		V	AC、DC：110；220			
14	Rated power of energy storage motor		W	≤ 230			
15	Energy storage time of energy storage motor		S	≤ 15			
16	Rated voltage of opening and closing coil		V	DC：110；220			
17	Rated current of opening and closing coil		A	1.05 (110V) 0.96 (220V)			
18	Contact stroke		mm	20 ± 2			
19	Contact contact stroke		mm	7.5 ± 1.5			
20	Three–phase opening, closing phase asynchronous		ms	≤ 2			
21	Contact closing bounce time		ms	≤ 3			
22	The main circuit resistance (not include the contact arm)		μ Ω	≤ 40			

Outline overall and installing dimensions

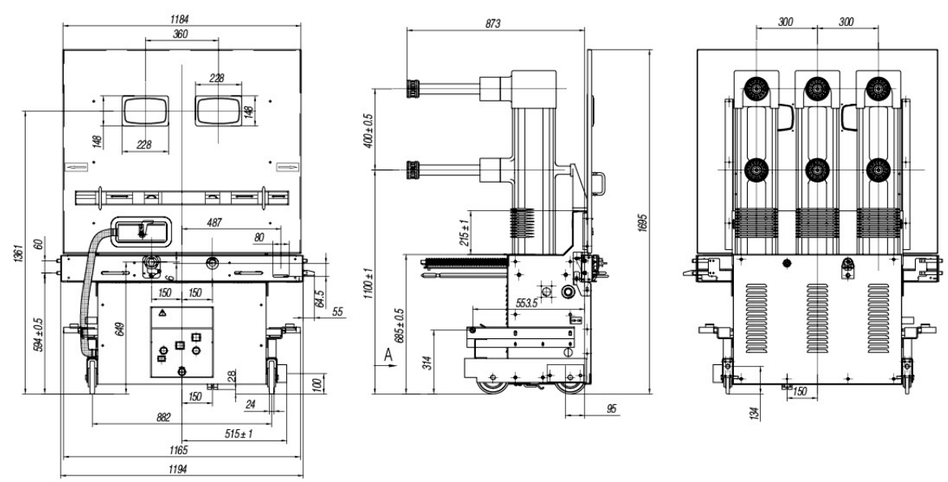

◇ PT handcart 630A

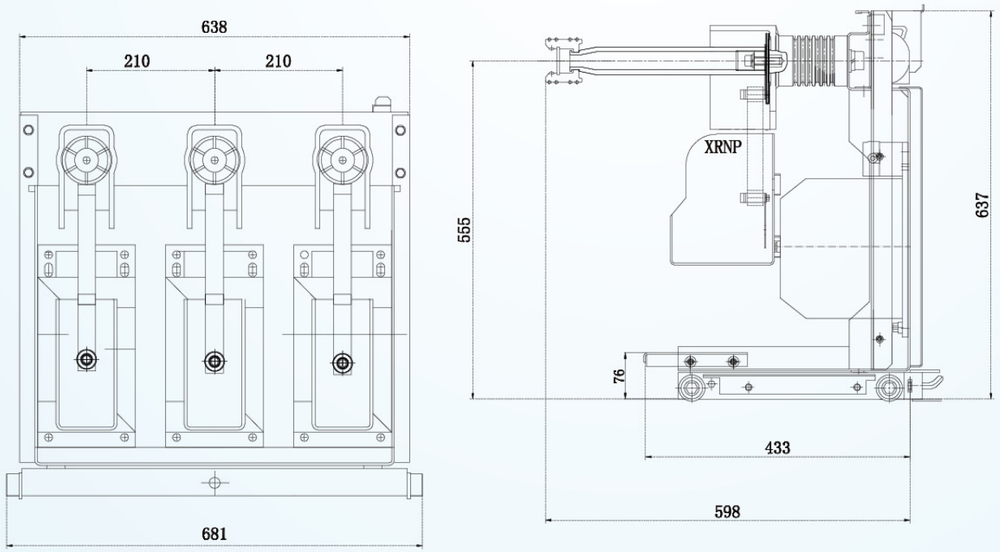

◇ ZN85-40.5 PT handcart

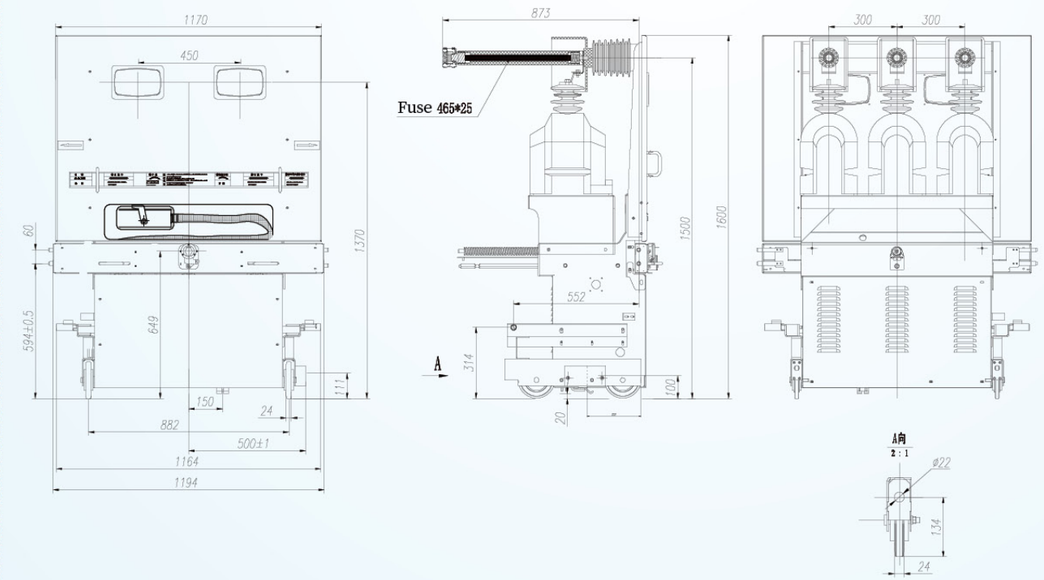

◇ ZN85-40.5D Isolation handcart

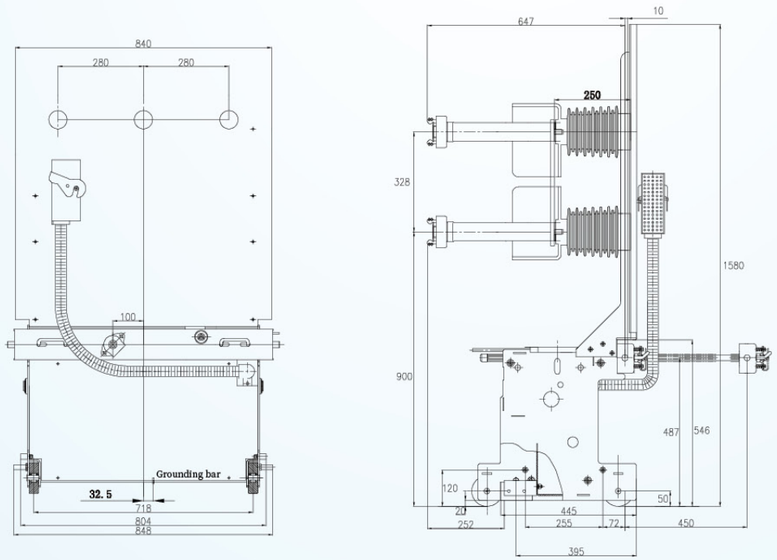

◇ ZN85-40.5 Isolation handcart insulation cylinder type

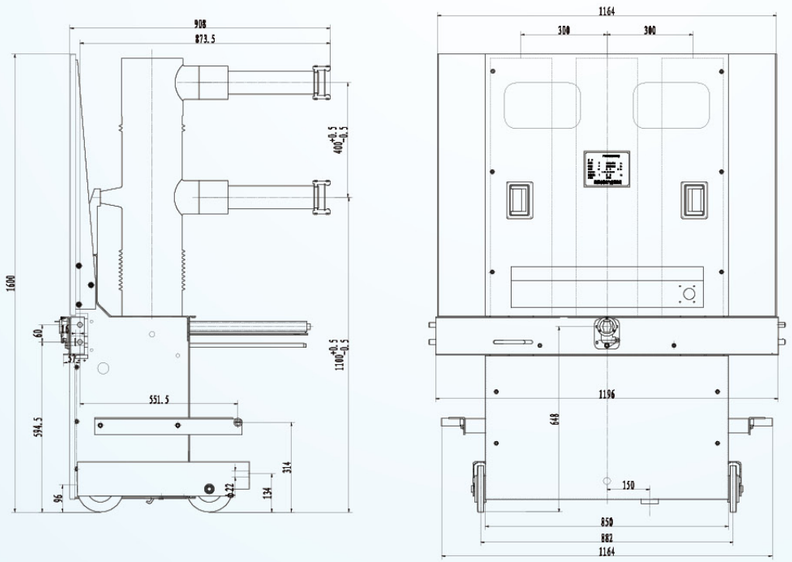

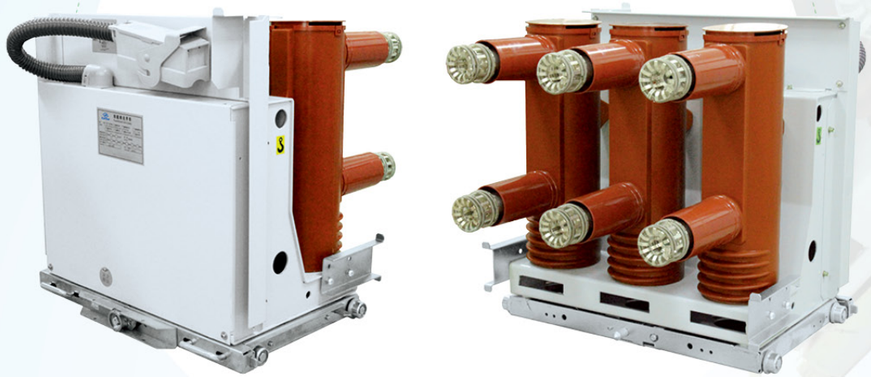

◇ 630A Isolation handcart insulation cylinder type

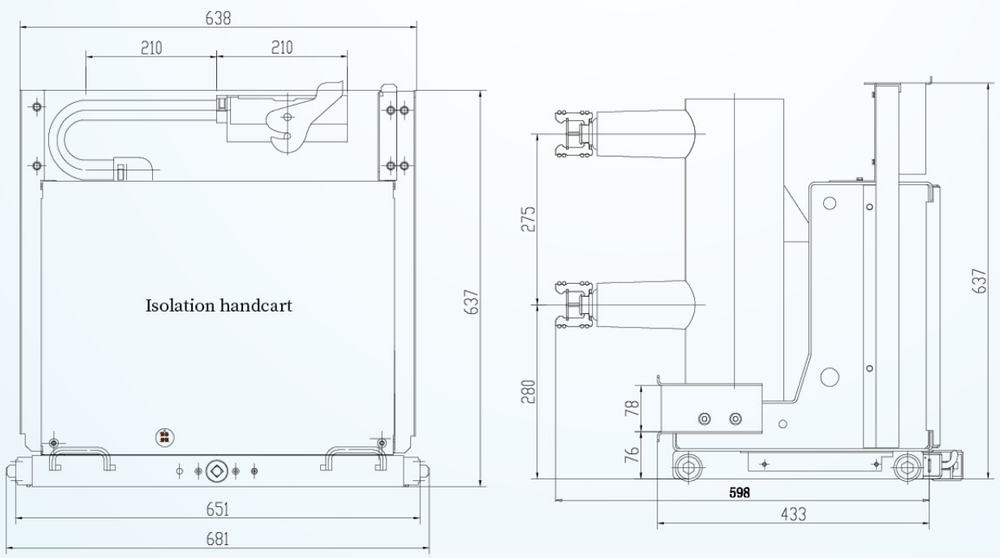

◇ Metering trolley 630A

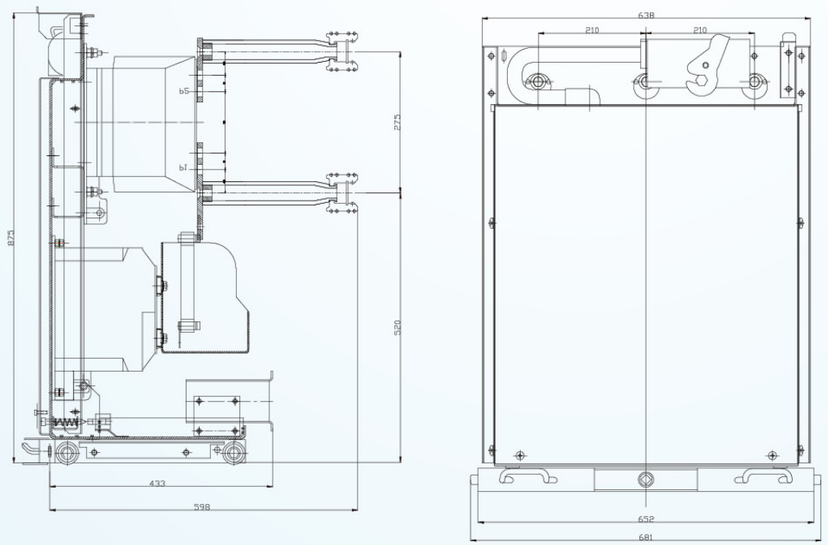

◇ Metering trolley with measuring cylinder 630A

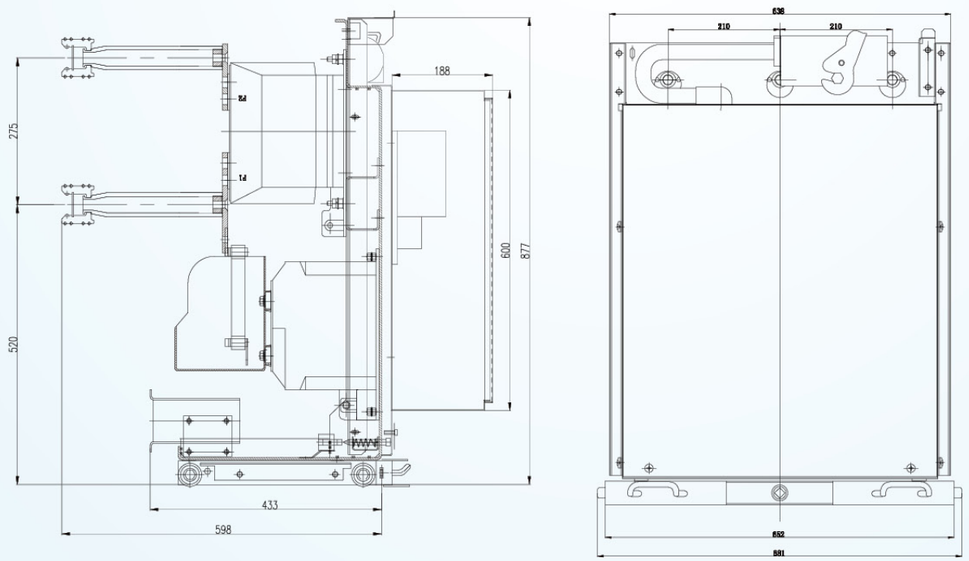

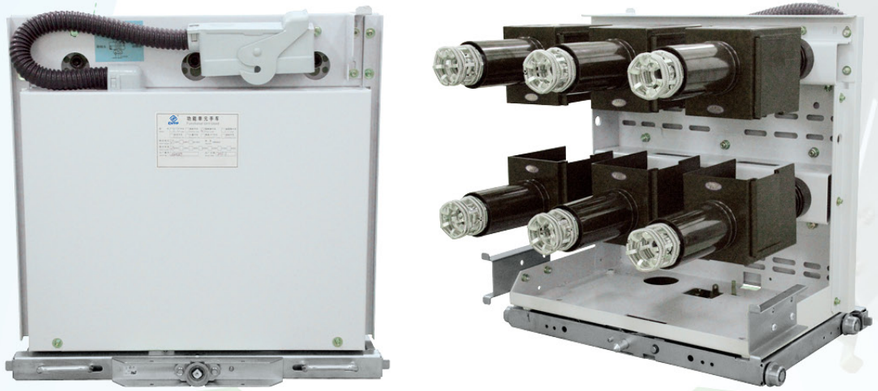

◇ Customized fuse handcart 630A（XRNT）

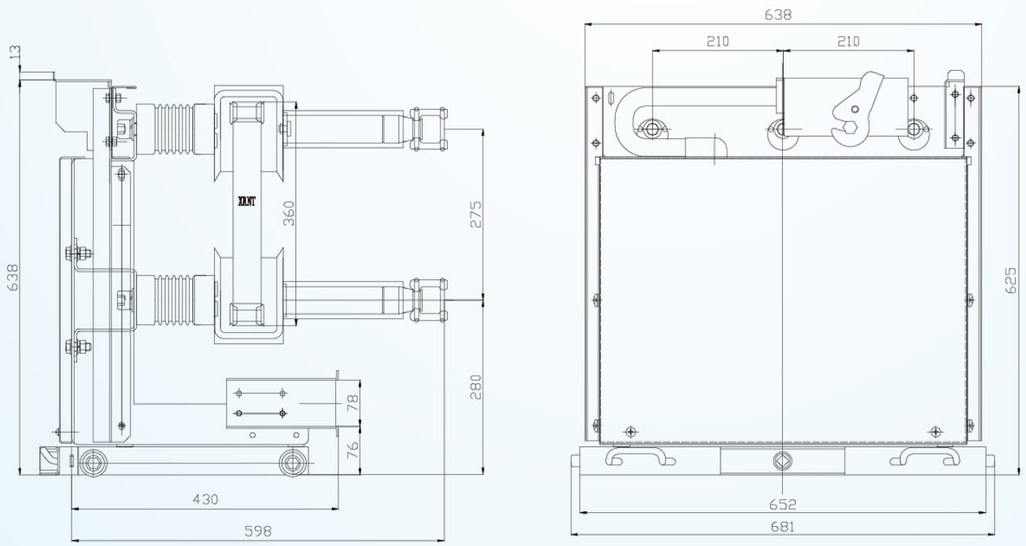

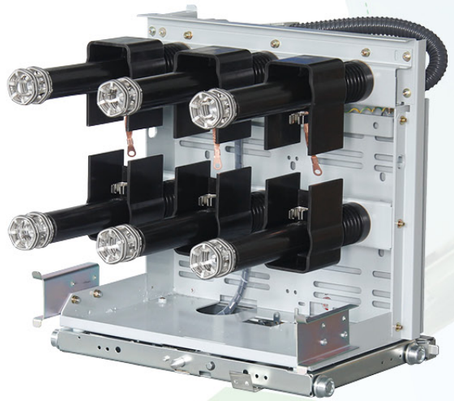

◇ Fuse handcart 630A（XRNP）

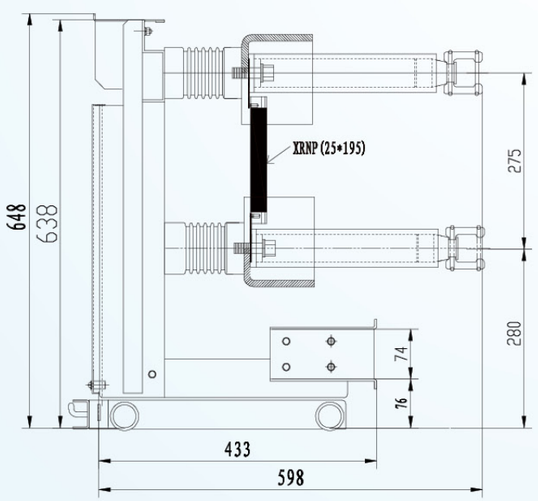

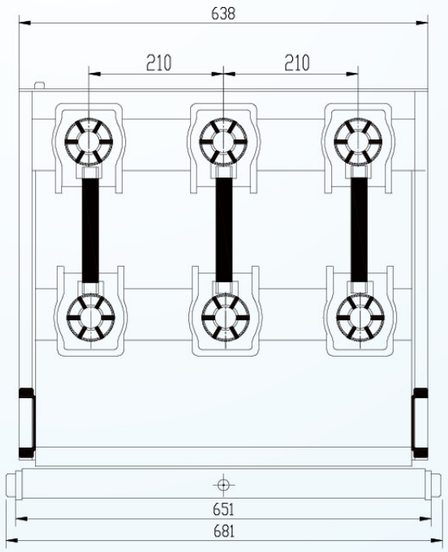

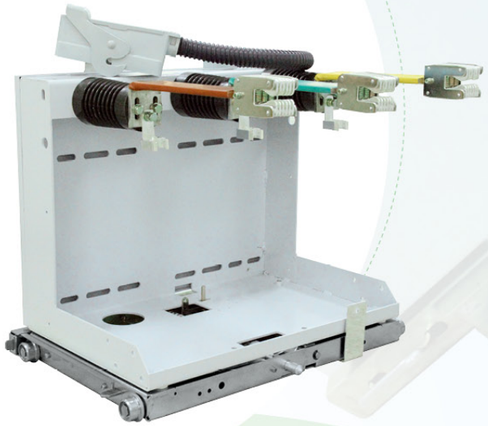

◇ Duckbill PT handcart

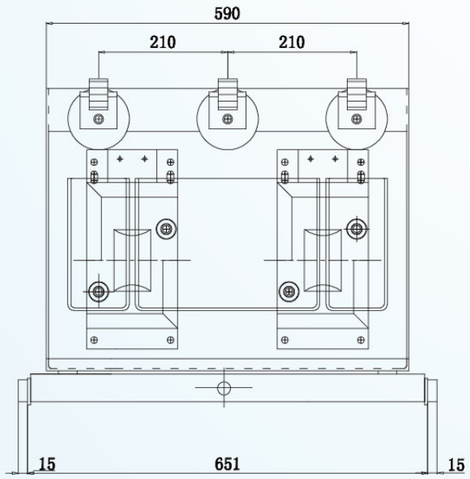

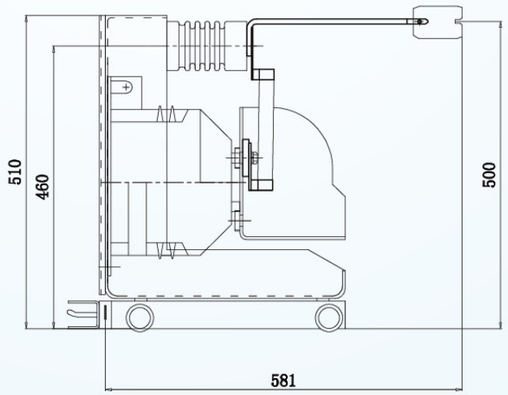

ZW32-12(G)/T

Outdoor high voltage Vacuum Circuit Breaker

General

ZW32–12(G)/T type outdoor high voltage vacuum circuit breaker (hereinafter called circuit breaker) is suitable for three–phase, AC50Hz with 12KV rated voltage. The circuit breaker is mainly used to break and close the load current, overload current and short circuit current in the power line, with overload and short circuit protection function. It meets control and measurement requirements, as well as remote control and monitor. It is widely used in power distribution, systems of substations and industrial and mining enterprises for control and operation, especially suitable for occasions that need frequent operation.

It complies with the technical standard of GB1984–2003、DL/T 402–207 and IEC60056 etc.

Model Meaning

Z W 32 – 12 (G) / T □ – □

- Rated short circuit breaking current (KA)
- Rated current (A)
- Spring operating mechanism
- Isolation switch
- Rated voltage (KV)
- Design number
- Outdoor
- Vacuum Circuit Breaker

Working Condition

- Ambient air temperature: Max.+45℃, Min.–40℃.
- Relative Air Humidity: Daily average is not greater than 95%, month average is not greater than 95%.
- Altitude: ≤3000m.
- Wind pressure: Not more than 700 Pa (Equivalent to wind speed 34m/s).
- Pollution level: IV (Creepage distance≤31mm/KV).
- Icing thickness: ≤10mm.
- Installation site: should be no fire, explosion hazard, serious pollution, chemical corrosion and severe vibration, etc.

Technical specification

No.	Item			Unit	Data	
1	Rated voltage			KV	12	
2	Rated current			A	630	1250
3	Rated frequency			Hz	50	
4	Rated insulation level	1 minpower frequency withstand voltage	Dry test	KV	42/48 (Between open contacts)	
			Wet test		34	
			Secondary circuit to earth		2	
		Lightning impulse withstand voltage (peak)			75/85 (Between open contacts)	
5	Rated short circuit breaking current			KA	20	25
6	Rated short–circuit closing current (peak)			KA	50	63
7	Rated short–circuit withstand current			KA	20	25
8	Rated peak withstand current			KA	50	63
9	Rated short–circuit breaking current breaking times			Times	30	
10	Rated short circuit duration			s	4	
11	Rated operating voltage and auxiliary voltage			V	DC220、AC220、AC/DC220	
12	Rated operating sequence				O–0.3s–CO–180s–CO	
13	Overcurrent release rated current			A	5	
14	Mechanical life			Times	10000	

Outline overall and installing dimensions

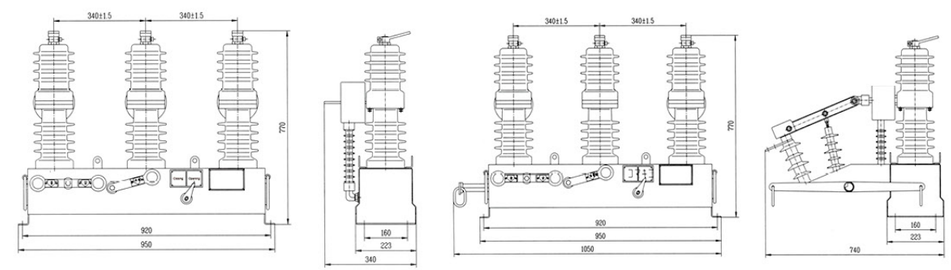

Dimensional drawing of circuit breaker (without isolation switch)

Dimensional drawing of circuit breaker (with isolation switch)

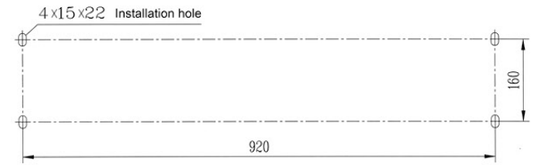

Circuit breaker installation dimension drawing

ZW32M-12

Outdoor Permanent Magnet High Voltage AC Vacuum Circuit Breaker

General

ZW32M–12 outdoor permanent magnet high voltage AC vacuum circuit breaker (hereinafter called smart switch) consists of ZW32–12/T630–20 outdoor high voltage vacuum circuit breaker, reclosing controller, external voltage transformer and control cable.

The smart switch is an outdoor high–voltage power distribution switchgear device with rated voltage of 12 KV and three–phase AC of 50 Hz. The circuit breaker is mainly used for breaking and closing the load current, overload current and short–circuit current in the power system. It is suitable for protection and control in substation and industrial and mining enterprise power distribution system, and the place where rural power grid needs frequent operation.

The smart switch complies with GB 1894–2003 "High Voltage AC Circuit Breaker" and GB/T 7261–2008 "Basic Test Methods for Relay Protection and Safety Automatic Devices" and other standards.

Model Meaning

Z W 32 M – 12 / T 630 – 20

- 20 — Rated short circuit breaking current (KA)
- 630 — Rated current (A)
- T — Spring operating mechanism
- 12 — Rated voltage (KV)
- M — Permanent magnet operating mechanism
- 32 — Design number
- W — Outdoor
- Z — Vacuum Circuit Breaker

Working Condition

- Ambient air temperature: Max.+45℃,Min.–40℃.
- Altitude: ≤3000m.
- Wind speed: Not more than 34m/s.
- Relative Air Humidity: Daily average is not greater than 90%, month average is not greater than 90%.
- Pollution level: Not more than IV.
- Icing thickness: ≤10mm.
- Installation site: should be no fire, explosion hazard, chemical corrosion and severe vibration,etc.

Technical specification

No.	Item			Unit	Data
1	Rated voltage			KV	12
2	Rated current			A	630
3	Rated frequency			Hz	50
4	Rated insulation level	1 min power frequency withstand voltage (to earth, phase to phase, between open contacts)	Dry test	KV	42/48 (Between open contacts)
			Wet test		34
			Secondary circuit to earth		2
		Lightning impulse withstand voltage (peak)			75/85 (Between open contacts)
5	Rated short circuit breaking current			KA	20
6	Rated short–circuit closing current (peak)			KA	50
7	Rated short–circuit withstand current			KA	20
8	Rated peak withstand current			KA	50
9	Rated short–circuit breaking current breaking times			Times	30
10	Rated short circuit duration			s	4
11	Rated operating voltage and auxiliary voltage			V	DC220 or AC220
12	Rated operating sequence				O–0.3s–CO–180s–CO
13	Overcurrent release rated current			A	5
14	Mechanical life			Times	10000

Outline overall and installing dimensions

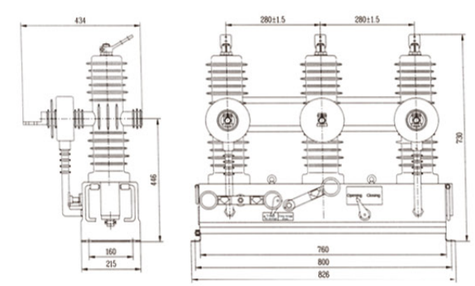

Figure 1 Smart switch body outline drawing

Figure 2 Smart switch body outline drawing

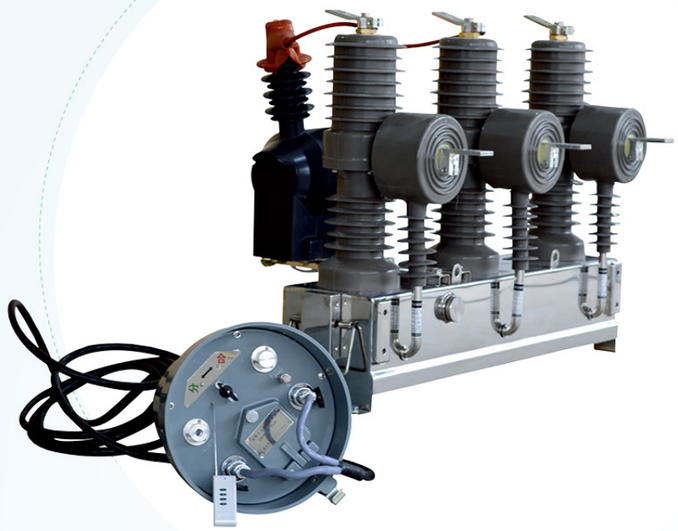

ZW32-12F

Outdoor high voltage vacuum circuit breaker (watchdog switch)

General

ZW32–12 Outdoor high voltage vacuum circuit breaker (watchdog switch) is an outdoor high–voltage power distribution switchgear device with rated voltage of 12KV and three–phase AC of 50 Hz. The circuit breaker is mainly used for breaking and closing the load current. The circuit breaker is mainly used for breaking and closing the load current and overload current in the power system. Short–circuit, quick–break, grounding protection, optional reclosing times, local remote control and remote communication functions, suitable for protection and control in substation and industrial and mining enterprises' distribution systems.When the internal fault of the T–type wiring of the 12KV line occurs, or although it occurs inside the user's incoming line switch, but the protection action time limit and the substation outlet switch protection are not proper, the substation outlet switch protection will be opened. If the fault is permanent and the substation coincides unsuccessfully, an accident in the medium voltage user community will power down the entire distribution trunk. Such common incidents in the power grid will cause significant losses to society. ZW32–12 outdoor high voltage vacuum circuit breaker (watchdog switch) (hereinafter called circuit breaker) is installed in the responsibility boundary of the overhead line, that is the front section of the user incoming line. The single–phase ground fault and the phase–to–phase short–circuit fault in the user will be automatically cut off to avoid the fault in the user boundary and the power transmission trunk and ensure the safety of power users of faulty users and improve the reliability of power consumption .

Model Meaning

Z W 32 – 12 F

- F — Spring operating mechanism
- 12 — Rated voltage (KV)
- 32 — Design number
- W — Outdoor
- Z — Vacuum Circuit Breaker

Working Condition

- Ambient air temperature: Max.+40℃,Min.–40℃.
- Altitude: ≤2000m.
- Wind speed: Not more than 34m/s (Equivalent to 700 Pa on a cylindrical surface).
- Pollution level: IV.
- No frequent violent vibration, the seismic intensity does not exceed 8 degrees.
- The place should be no fire, explosion hazard, chemical corrosion.

Technical specification

No.	Item	Unit	Data
1	Rated voltage	KV	12
2	Rated frequency	Hz	50
3	Rated current	A	630
4	Rated short circuit breaking current	KA	20
5	Rated peak withstand current	KA	50
6	Rated short–circuit withstand current	KA	20
7	Rated short circuit closing current(peak)	KA	50
8	Mechanical life	Times	10000
9	Rated short–circuit breaking current breaking times	Times	30
10	Power frequency withstand voltage (1 min): (wet) (dry) phase to phase, to earth/Between open contacts	KV	42/48
11	Lightning impulse withstand voltage (peak) phase to phase、to earth/ Between open contacts	KV	75/85
12	Secondary circuit 1min power frequency withstand voltage	KV	2

Outline overall and installing dimensions

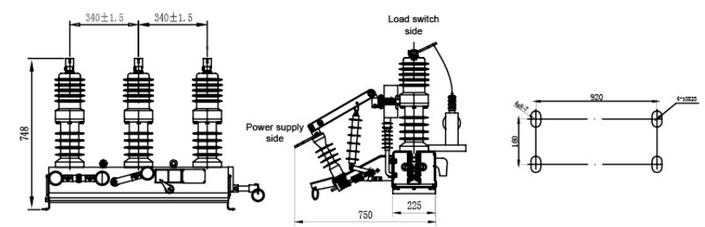

ZW32–12 Outdoor high–voltage vacuum boundary breaker (watchdog switch) outline and installation dimension drawing (with PT)(with isolation)

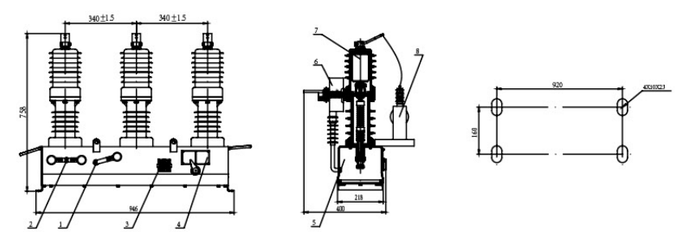

ZW32–12 Outdoor high–voltage vacuum boundary breaker (watchdog switch) outline and installation dimension drawing (with PT) (with isolation)

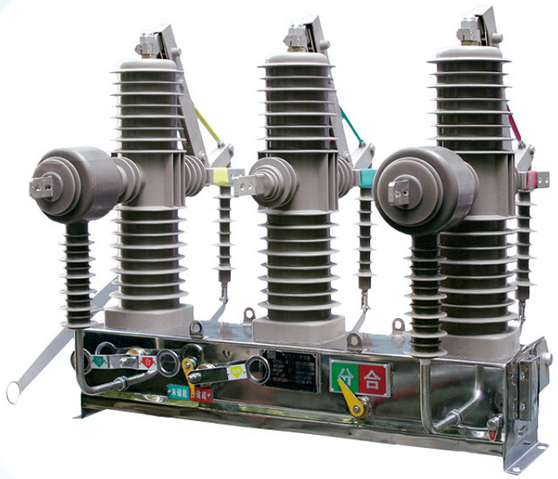

ZW32-24

Outdoor High Voltage Vacuum Circuit Breaker

General

ZW32–24 outdoor high voltage vacuum circuit breaker (hereinafter referred to as) is suitable for three–phase AC 50Hz, rated voltage 24KV outdoor switchgear. It can be used in various load current and frequent operation occasions. It can be applied in the construction and renovation of power equipment in different places such as urban and rural network, mines, railways and so on.

The product has been successfully developed 24 KV outdoor high voltage switchgear suitable for China's national conditions developed on the basis of foreign advanced technology and domestic raw materials and processes. Compared with international similar products, it is a kind of intelligent product with miniaturization and maintenance–free. At the same time, the product is environmentally friendly without pollution to the surrounding environment.

The circuit breaker complies with GB1984–2003 "High Voltage AC Circuit Breaker", DL/T402–2007 "High Voltage AC Circuit Breaker Ordering Technical Conditions", DL/T403–2000 "12KV~40.5KV High Voltage Vacuum Circuit Breaker Ordering Technical Conditions" and other technical standards.

Model Meaning

Z W 32 – 24 / T □ – □

- Rated short circuit breaking current (KA)
- Rated current (A)
- Spring operating mechanism
- Rated voltage (KV)
- Design number
- Outdoor
- Vacuum circuit breaker

Working Condition

- Ambient temperature: –40℃~+40℃.
- Relative humidity: Day average relative humidity≤95%, Month average relative humidity≤90%.
- Altitude: ≤3000mm.
- Wind pressure: Not more than 700Pa (Equivalent to wind speed 34m/s)
- Pollution level: IV (creepage distance≥31mm/KV).
- Icing thickness: ≤10mm.
- Installation site: Should be no fire, explosion hazard, serious pollution, chemical corrosion and severe vibration,etc.

Technical specification

No.	Item		Unit	Data	
1	Rated voltage		KV	24	
2	Rated frequency		Hz	50	
3	Rated current		A	630	1250
4	Rated short circuit breaking current		KA	20	25
5	Rated peak withstand current (peak)		KA	50	63
6	Rated short circuit closing current (peak)		KA	50	63
7	Rated short–time withstand current / duration		KA/s	20/4	25/4
8	Rated operating sequence			O–0.3s–CO–180s–CO	
9	Mechanical life		Times	10000	
10	Rated short–circuit breaking current breaking time		Times	20	
11	1 min power frequency withstand voltage	(Wet) Phase to phase, to earth/Between open contacts	KV	50/65	
		(Dry) Phase to phase, to earth/Between open contacts		65/79	
		Secondary circuit		2	
12	Lightning impulse withstand voltage(peak)phase to phase、to earth/ between open contacts		KA	125/145	
13	Weight		kg	115	

Outline overall and installing dimensions

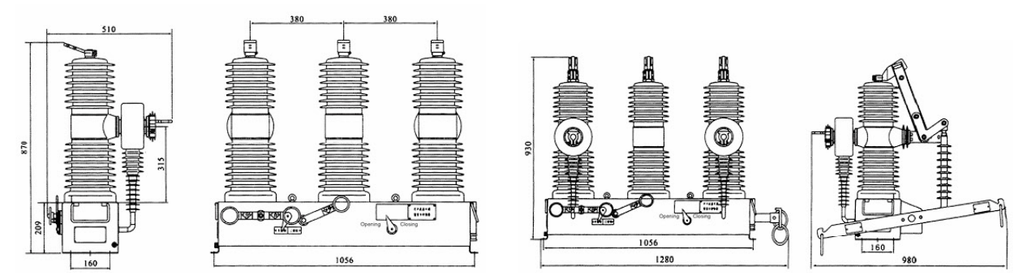

ZW32–24/T Vacuum Circuit Breaker

ZW32–24G/T Vacuum Circuit Breaker

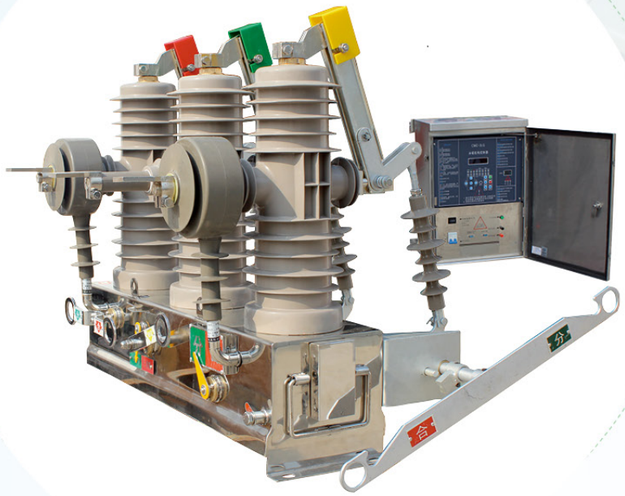

ZW43-12(G)/M630-20

Outdoor High Voltage Permanent Magnet Vacuum Circuit Breaker

General

ZW43–12(G)/M630–20 type outdoor high voltage permanent magnet vacuum circuit breaker (Hereinafter called permanent magnet switch) is suitable for the power system with three–phase AC 50 Hz and rated voltage of 12KV. The permanent magnet switch is mainly used as a substation 10KV outlet switch and a line protection switch for closing and opening load current, breaking overload current and short circuit current in 10KV three–phase AC power system.

The circuit breaker complies with GB1984–2003 "High Voltage AC Circuit Breaker", DL/T402–2007 "High Voltage AC Circuit Breaker Ordering Technical Conditions", DL/T403–2000 "12KV~40.5KV High Voltage Vacuum Circuit Breaker Ordering Technical Conditions" and other technical standards.

Model Meaning

Z W 43 – 12 (G) / M 630 – 20

- 20 — Rated short circuit breaking current (KA)
- 630 — Rated current (A)
- M — Permanent magnet mechanism
- (G) — With isolation switch
- 12 — Rated voltage (KV)
- 43 — Design number
- W — Outdoor
- Z — Vacuum circuit breaker

Working Condition

- Ambient temperature: –40℃~+40℃.
- Altitude: ≤3000mm.
- Wind pressure: Not more than 700Pa(Equivalent to wind speed 34m/s).
- Pollution level: Not more than IV.
- Place should be no fire, explosion hazard, chemical corrosion and severe vibration,etc.

Technical specification

No.	Item			Unit	Data
1	Rated voltage			KV	12
2	Rated insulation level	1 min power frequency withstand voltage	Dry test (phase to phase, to earth, Between open contacts)		42/48
			Wet test		34
		Lightning impulse withstand voltage (peak, phase to phase, between open contacts)			75/85
3	Rated Current			A	630
4	Rated short circuit breaking current			KA	20
5	Rated operating sequence				O~0.3–CO–180s–COS
6	Rated short–circuit breaking current breaking time			Times	30
7	Rated short circuit closing current(peak)			KA	50
8	Rated peak withstand current				
9	Rated short–time withstand current				20
10	Rated short circuit duration			S	4
11	Opening time (The time from the control unit to receiving the opening command to the separation of the three–phase contact)				0.040~0.060
12	Closing time(The time from the control unit to receiving the closing command to the closing time of the three–phase contact				0.070–0.120
13	Mechanical life			Times	10.000
14	Rated closing operating voltage			V	DC110
15	Rated opening operating voltage				DC110
16	Overcurrent protection	Current setting multiple			0.2~2.5
		Setting the allowable error of the current			± 10%
		Delay setting		S	0~5
		Delay allowed error			± 10%
17	Quick break protection	Current setting multiple			2.5~10
		Setting the allowable error of the current			± 10%
		Delay setting		S	0~0.5
		Delay allowed error			± 10%
18	Control unit AC charging input current	Rating		A	5
		Fluctuation range		A	0.5~8

Outline overall and installing dimensions

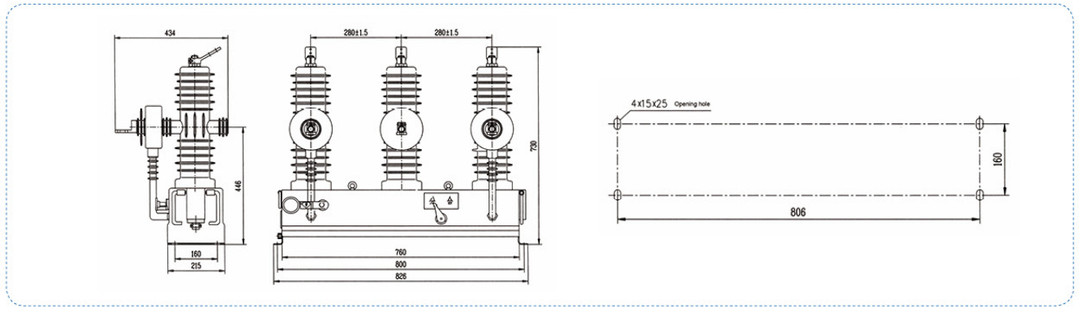

ZW8-12

Outdoor High Voltage AC Vacuum Circuit Breaker

General

ZW8–12(G) outdoor high voltage AC vacuum circuit breaker is suitable for the power system with three–phase AC 50 Hz and rated voltage of 12KV. It is mainly used to break load current, overload current and short circuit current of agricultural network, domain network and small power system. The overall structure of the product is three–phase common box type. Three–phase vacuum arc chamber is placed in the metal box. It is reliable with high insulation strength for the use of phase to phase insulation and to earthing insulation of SMC insulation material .

ZW8–12(G) consists of a ZW8–12 circuit breaker and an isolating switch, called a combined circuit breaker, which can be used as a sectional switch.

CT23 spring energy storage operating mechanism in this series is divided into electric and manual type.

Model Meaning

Z W 8 – 12 G / □ – □

- Z: Vacuum circuit breaker
- W: Outdoor
- 8: Design number
- 12: Rated voltage (KV)
- G: With isolation switch
- /: Rated current (A)
- □: Rated short circuit breaking current (KA)

Technical specification

No.	Item		Unit	Data
1	Rated voltage		KV	12
2	Rated Current		A	630
3	Power frequency withstand voltage (1 min)		KV	42
4	Lightning impulse withstand voltage (peak)			75
5	Rated short circuit breaking current		KA	16 20 25
6	Rated short circuit closing current			40 50 63
7	Rated peak withstand current			40 50 63
8	4s short–time withstand current			16 20 25
9	Rated operating sequence			O–0.3s–CO–180s–CO
10	Rated short–circuit breaking current breaking times		Times	30
11	Mechanical life			10000
	Rated voltage of energy storage motor		V	DC or AC 220
12	Rated operating voltage with special spring operating mechanism	Opening coil		
		Closing coil		
13	Overcurrent release rated current		A	5
14	Dynamic and static contacts allow wear thickness		mm	3

Outline overall and installing dimensions

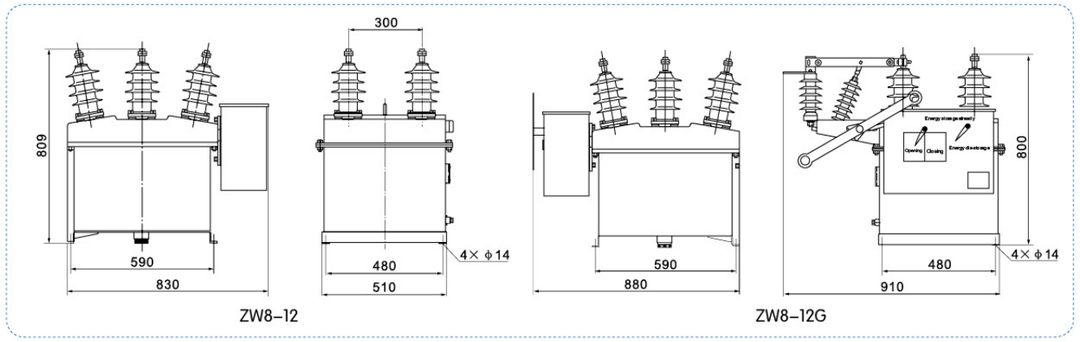

ZW7A-40.5

Outdoor High Voltage AC Vacuum Circuit Breaker

General

ZW7A–40.5 outdoor high voltage AC vacuum circuit breaker is a kind of current transformer external outdoor power distribution equipment, suitable for 50 Hz three–phase AC with 40.5KV rated voltage. It is mainly used for breaking and closing the load current, overload current and short circuit current in the power system. It is suitable for protection and control in power distribution systems of substations and industrial and mining enterprises. It could be applied in the rural power grids and other places that need frequent operation, especially suitable for urban network and rural network transformation.

Model Meaning

Z W 7 A – 40.5 / □ – □

- Rated short circuit breaking current (KA)
- Rated current (A)
- Rated voltage (KV)
- Derived code (Current transformer external)
- Design number
- Outdoor
- Vacuum circuit breaker

Technical specification

No.	Item			Unit	Data
1	Rated voltage			KV	40.5
2	Rated insulation level	1 min power frequency withstand voltage	Dry test		95
			Wet test		80
		Lightning impulse withstand voltage(peak)			185
3	Rated current			A	1250; 1600; 2000
4	Rated short circuit breaking current			KA	20; 25; 31.5
5	Rated operating sequence				O–0.3s–CO–180s–CO
6	Rated short–circuit breaking current times			Times	12
7	Rated short circuit closing current (peak)			KA	50; 63; 80
8	Rated peak withstand current			KA	
9	Rated short–time withstand current			KA	20; 25; 31.5
10	Rated short circuit duration			s	4
11	Contact opening distance			mm	22 ± 2
12	Contact overtravel			mm	4 ± 1
13	Average opening speed			m/s	1.5 ± 0.2
14	Average closing speed			m/s	0.7 ± 0.2
15	Contact closing bounce time			ms	≤ 2
16	Three–phase closing (opening) gate synchronous time difference			ms	≤ 2
17	Closing time			ms	≤ 150
18	Opening time			ms	≤ 60
19	Mechanical life			Times	10000
20	Rated voltage of the auxiliary circuit at rated operating voltage			V	DC110/220、AC110/220
21	DC resistance per phase circuit (without transformer)			μ Ω	≤ 100
22	Weight			kg	800

Outline overall and installing dimensions

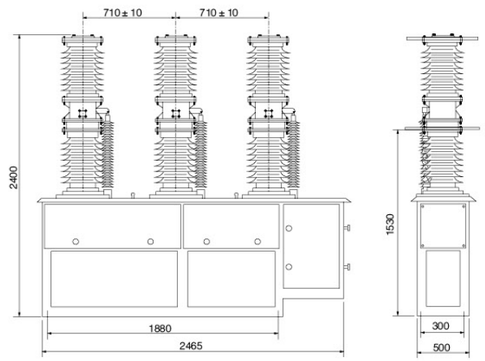

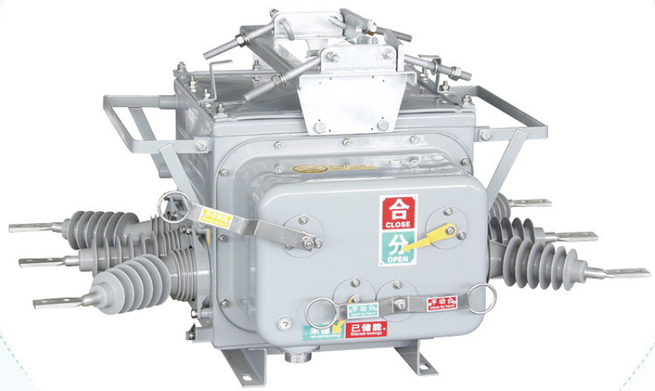

ZW20A-12

Outdoor High Voltage Vacuum Circuit Breaker

General

ZW20A–12 outdoor high voltage vacuum circuit breaker (hereinafter called vacuum circuit breaker) is an outdoor power distribution equipment with rated voltage of 12 KV and three–phase AC 50 Hz. It uses vacuum arc extinguishing and SF6 gas as the insulating medium, and is an improved product of ZW20–12 type on–column vacuum circuit breaker.The cabinet adopts the gas sealing, explosion–proof and insulation structure technology introduced by Japan Toshiba VSP5. The inlet and outlet conduits also have improved sealing performance, and the overall sealing performance is excellent. The SF6 gas filled internally does not leak and is not affected by environmental impacts; its spring operating mechanism is miniaturized and optimized for reliability and stability. It uses a linear chain main drive and a multi–stage trip system. The reliability and stability of the spring are several times higher than the traditional spring operating mechanism; the contact between the shaft and the sleeve of the main circuit adopts an adduction and external tension type bracelet structure, and the contact resistance of the main circuit is small and the temperature rise is low. Therefore, ZW20A–12 outdoor on–column vacuum circuit breaker is a maintenance–free product, which is the best among the on–column circuit breakers.

Compared with ZW20–12, ZW20A–12 also adds over–current protection, mechanical spring energy storage indication, and is equipped with aviation socket for secondary electrical connection, which is easy to integrate with intelligent controller.

It is widely used for its excellent electrical and mechanical properties. It is mainly used for breaking and closing the load current and short–circuit current of 10KV power system. It is suitable for protection and control in substation and industrial and mining enterprise power distribution system, and is more suitable for places where the power grid is frequently operated. This product matches the controller and has excellent recloser function to meet the requirements of distribution automation system.

Working Condition

- Altitude: ≤3000mm.
- The upper limit of the ambient air temperature does not exceed 40℃, the lower limit does not exceed –40℃, and the daily temperature difference is 25℃.
- Wind pressure does not exceed 700Pa.
- Pollution level: IV.
- Icing thickness: 100mm.
- Installation site: no flammable, explosion hazard, chemical corrosion.
- Earthquake intensity does not exceed 8 degrees.

Technical specification

No.	Item		Unit	Data	
1	Rated voltage		KV	12	
2	Rated frequency		Hz	50	
3	Rated current		A	630	1000
4	Rated short circuit breaking current		KA	20	25
5	Rated peak withstand current		KA	50	63
6	Rated short–time withstand current		KA	20	25
7	Rated short circuit closing current		KA	50	63
8	Rated operating sequence			O–0.3s–CO–180s–CO	
9	Rated short circuit duration		s	4	
10	Mechanical life		Times	10000	
11	Rated current breaking times		Times	10000	
12	Rated short circuit breaking times		Times	30	
13	Power frequency withstand voltage(1 min)	(Wet) phase to phase, to earth	KV	34	
		(Dry) phase to phase ,to earth/between open contacts	KV	42/48	
14	Lightning impulse withstand voltage phase,earth/between open contacts		KV	75/85	
15	Secondary circuit 1 min power frequency withstand voltage		V	2000	

Outline overall and installing dimensions

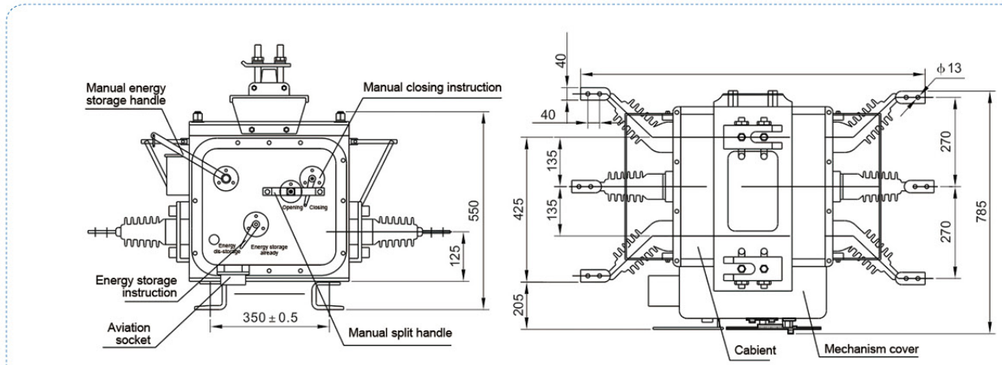

ZW20F-12

Outdoor High Voltage Vacuum Circuit Breaker (Watchdog Switch)

General

ZW20F–12 outdoor high voltage vacuum circuit breaker (watchdog switch) is an outdoor power distribution equipment with rated voltage of 12KV and three–phase AC 50 Hz.

When the internal fault occurs in the user of the T–connection of the 12KV distribution line, or it occurs inside the user's incoming switch, but the protection action time limit and the substation outlet switch are improper protection, the substation outlet switch will be opened. If the fault is permanent and the substation coincides unsuccessfully, an accident in the medium voltage user community will power down the entire distribution trunk.This kind of common accident in the power grid will cause great losses to society.

ZW20F–12 outdoor high voltage vacuum circuit breaker (watchdog switch), installed in the responsibility boundary of the overhead distribution line, which is the front end of the user's incoming line, will automatically remove the single–phase ground fault and the phase–to–phase short–circuit fault within the user, avoiding the faults in the user's boundary and the power transmission trunk, and ensuring the safety of the non–faulty users,to improve the reliability of electricity consumption.

Model Meaning

Z W 20 F – 12 / □ – □

- Z — Vacuum circuit breaker
- W — Outdoor
- 20 — Design number
- F — Boundary type
- 12 — Maximum working voltage (KV)
- □ — Rated current (A)
- □ — Rated short circuit breaking current (KA)

Technical specification

No.	Item		Unit	Data	
1	Rated voltage		KV	12	
2	Rated frequency		Hz	50	
3	Rated current		A	630	1000
4	Rated short circuit breaking current		KA	20	25
5	Rated peak withstand current		KA	50	63
6	Rated short–time withstand current		KA	20	25
7	Rated short circuit closing current		KA	50	63
8	Rated operating sequence			O–0.3s–CO–180s–CO	
9	Mechanical life		Times	10000	
10	Rated current breaking times		Times	10000	
11	Rated short circuit breaking times		Times	30	
12	power frequency withstand voltage (1 min)	(Wet) phase to phase,to earth	KV	34	
		(Dry)phase to phase,to earth/between open contacts	KV	42/48	
13	Lightning impulse withstand voltage phase to phase,to earth/between open contacts		KV	75/85	
14	Secondary circuit 1 min power frequency withstand voltage		V	2000	
15	Weight		kg	About 140	
16	Clearance between open contacts		mm	9	
17	Contact contact stroke		mm	3	
18	Average closing speed		m/s	1.2 ± 0.2	
19	Average opening speed		m/s	0.6 ± 0.2	
20	Rated operating voltage		V	AC/DC220	
21	SF6 gas rated pressure (gauge pressure)		MPa	0	

Outline overall and installing dimensions

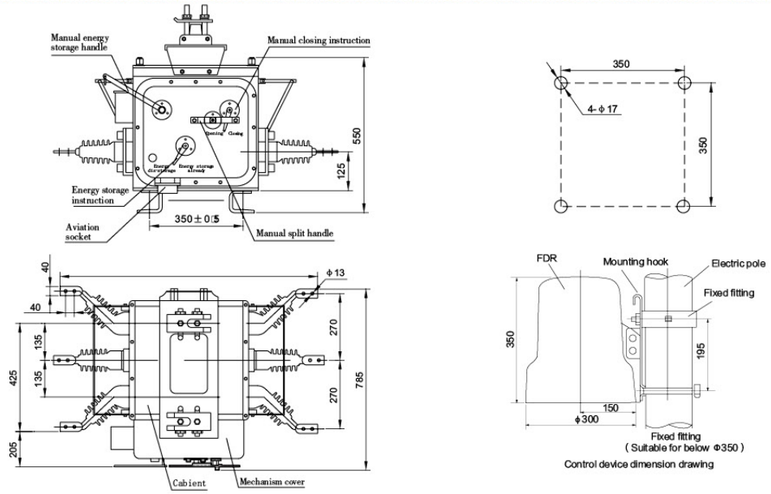

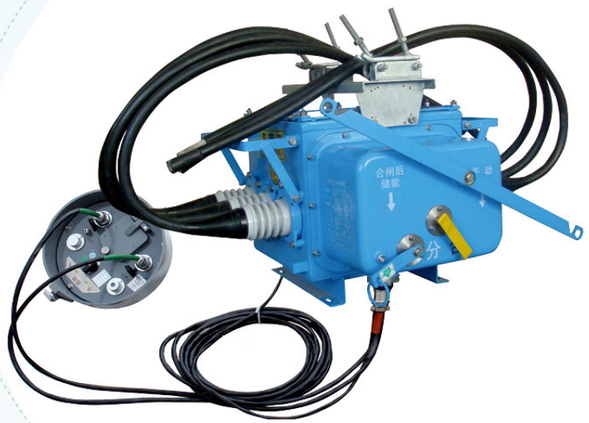

FZW28-12(FFK)

Outdoor Boundary Vacuum Load Switch

General

FZW28–12(FFK) outdoor boundary vacuum load switch is suitable for outdoor three–phase AC distribution system with rated voltage of 12 KV and rated frequency of 50 Hz, used for open/closed load current and closed short circuit current. FZW28–12(FFK) outdoor boundary vacuum load switch is applicable to substation, industrial and mining enterprises and urban and rural networks for protection and control, urban and rural network automation distribution network and frequently operated places.

FZW28–12(FFK) outdoor boundary vacuum load switch is used for operational control switches for overhead line distribution systems in a variety of forms. It has outstanding advantages such as free–oil, simple mechanism, reliable performance and no maintenance, and has been widely used so far. The product is combined with equipment such as FDR type fault detector or RTU remote terminal device to form a distribution automation system with very simple structure, which can realize automatic positioning of overhead line faults and automatic isolation of fault sections. In order to update the existing distribution switchgear in China, it is necessary to realize the transformation of power distribution equipment characterized by no oil and automation.

Working Condition

- Temperature:–25℃~+70℃.
- Altitude :2000m.
- Wind speed≤35m/s, Relative humidity≤95%.
- Seismic intensity: 8.
- Ground level acceleration1/4g, Ground vertical acceleration 1/8g, Safety factor1.7.
- Pollution level: III.
- Max. Icing thickness: 10mm.
- System neutral point earthing method: neutral point is not earthed / arc suppression coil earthing / small resistance earthing system.

Features

Automatic blocking phase–to–phase short–circuit fault: When the same short–circuit fault occurs in the user’ s branch, the demarcation switch is opened and locked immediately after the substation breaker or recloser protection trips. After the substation coincides, other branch users on the feeder quickly resume power supply.

Quick locating fault point: After the user's branch line accident caused the protective action of the dividing switch, the responsible user loses power and reports the accident information on his own initiative. The power company can dispatch personnel to the site to check the cause of the accident through the handheld computer or communication module.

Automatic cut–off single–phase earthing fault: When a single–phase ground fault occurs on the user's branch, the demarcation switch is automatically opened; other sub–stations and feeder users on the feeder do not feel the fault.

This switch can realize the following functions: quick–break protection, over–current protection, three–fold reclosing, event recording, anti–surge protection, zero sequence protection, real–time clock, post–reclosing acceleration, real–time status inquiry, smart handheld control, local/remote setting,fault active reporting, GSM short message function.

Technical specification

No.	Item			Unit	Data
1	Rated voltage			KV	12
2	Rated frequency			Hz	50
3	Rated insulation level	Lightning impulse withstand voltage		KV	75/85 (between open contacts)
		1 min power frequency withstand voltage	Dry	KV	42/48 (between open contacts)
			Wet		34
4	Rated current			A	630
5	Rated short–time withstand current and duration			KA/2s	16
6	Rated peak withstand current			KA	40
7	Rated short circuit closing current			KA	40
8	Mechanical life			Times	10000
9	Net weight			kg	210

Outline overall and installing dimensions

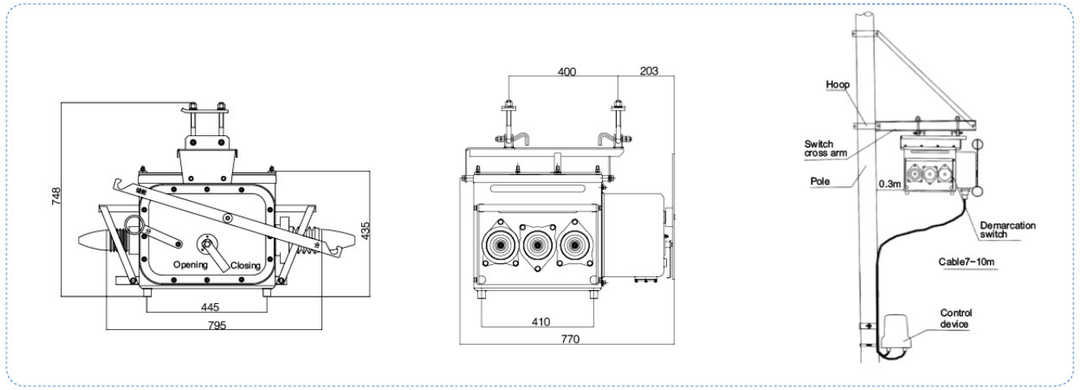

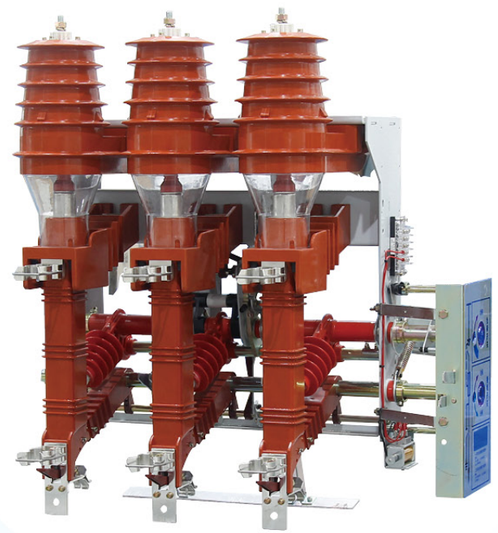

FKN12-12/FKRN12-12D

Indoor High Voltage Gas Pressure Load Switch

General

FN12–12D/630–20 indoor AC high voltage load switch(Hereinafter called FN12–12D load switch) is is suitable for three–phase AC distribution system with rated voltage of 12 KV and rated frequency of 50Hz. It is used for opening and closing load current, closed loop current, no–load transformer and cable charging current, closing short circuit current. The load switch equipped with the earthing switch can withstand the short circuit current.

FN12–12(R)D/125–31.5 indoor AC high voltage load switch––fuse combination (hereinafter called FN12–12(R)D combination) is an indoor high voltage switch device which combines FN12–12D load switch and S□LAJ–12(XRNT□–10)high voltage current limiting fuse. It can break reliably under any current except it is up to short–circuit current. The load switch breaks the working current and the fuse breaks the short circuit current. And the combination breaks any overcurrent between the working current and the full short circuit current, and the fuse breaks the load switch through its impactor.

Working Condition

- ○Ambient air temperature:Max.+40℃;Min.–25℃(Allowed to storage and transportation at –30℃) the average value is not higher than 35℃ with in 24 hours.
- ○Air relative humidity:Daily average is not greater than 95%, monthly average is not greater than 90%
- ○Earthquake intensity: no more than 8 degrees
- ○Altitude:not more than 1000m
- ○No frequent and severe vibration
- ○Pollution level:II
- ○The surrounding air is not contaminated by corrosive and flammable gases, water vapor, etc.

Technical specification

No.	Item	Unit	Data	
			FN12–12D/630	FN12–12(R)D/630
1	Rated voltage	KV	12	
2	Rated frequency	Hz	50	
3	Rated current	A	630	100
4	Lightning impulse withstand voltage	KV	To earth and phase to phase75、isolating fracture 85	
5	1 min power frequency withstand voltage	KV	To earth and phase to phase 42、isolating fracture 48	
6	Rated thermal stability current	KA	20 (4S)	
7	Rated dynamic current	KA	50	
8	Rated closing current (peak)	KA	50	50
9	Rated short circuit breaking current (Expected value)	KA		31.5
10	Maximum at critical breaking current	A2S	According to the fuse characteristic curve	
11	Minimum breaking current	KA	According to the fuse characteristic curve	
12	Rated transfer current	KA		1.5
13	Maximum breaking current (reference value)	KA	1.8	
14	Breaking the capacity of the no–load transformer	KVA	1250	
15	Rated cable charging current	A	10	
16	Rated active load current breaking times	Times	> 100	
17	The impactor touches the load switch opening time	S		> 0.06
18	Earthing switch thermal stability current	KA	20(2S)	
19	Earthing switch thermal stability current (peak)	KA	50	
20	Motor operating power supply voltage	V	AC DC 110、220	

Outline overall and installing dimensions

FKRN12A–12D Dimension of air–pressure load switch–fuse combination with right operation

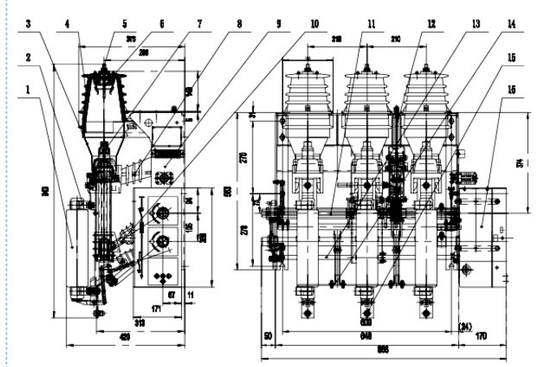

FKRN12A–12D Dimension of air–pressure load switch–fuse combination with right operation(inversion)

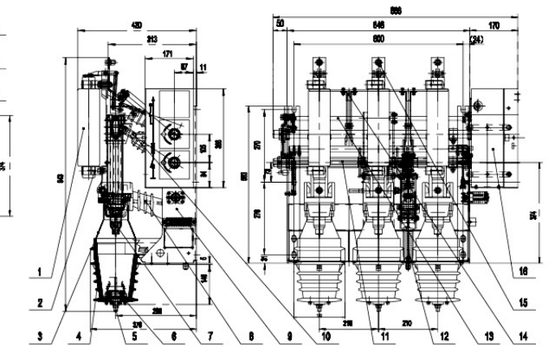

1.Fuse
2.Fuse Clip
3.Clear Insulating Cover
4.Fixed Contact Bell Jar
5.M12 Screw Of Upper Terminal
6.Fixed Contact
7.Conductive Cylinder And Moving Contact
8.Bench Insulator Of Moving Contact
9.Rack
10.Button Pole
11.Shaft Of Main Knife Switch
12.Storage Mechanism
13.Tripping Shaft
14.Earthing Switch
15.Lower Terminal
16.Operation Interlocking Mechanism

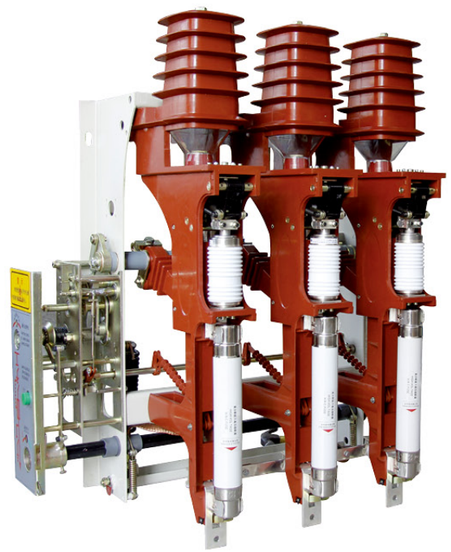

FZN25-12DL/T630-20
FZRN25-12DL/T200-31.5

Indoor AC High Voltage Vacuum Load Switch

General

FZN25–12DL/T630–20 indoor AC high voltage vacuum load switch is an indoor unit with three–phase AC of 50Hz, 12KV rated voltage, applicable to industrial and mining enterprises' power distribution stations and substations, etc. As the protection and control of electrical facilities, it is used for opening and closing load current, closed loop current, no–load transformer and cable charging current.

It matches an earthing switch with the ability to close short–circuit current. The operating mechanism can be divided into manual and electric type, which is convenient for realizing the three remote control requirements of the power system.

FZR25–12DL/T200–31.5 indoor AC high voltage vacuum load switch– fuse combination is an indoor unit with three–phase AC of 50Hz, 12KV rated voltage, applicable to industrial and mining enterprises' power distribution stations and substations, etc., as short circuit protection and load control.

It matches an earthing switch with ability to close short–circuit current.The operating mechanism can be divided into manual and electric type,which is convenient for realizing the three remote control requirements of the power system.

Working Condition

- Altitude: 1000m.
- Ambient air temperature: Max.+40℃; Min.–25℃ (Allowed to storage and transportation at –30℃).
- Air relative humidity: Daily average is not greater than 95%, monthly average is not greater than 90%.
- Pollution level: II.
- Seismic intensity: Not more than 8 degree.
- No frequent and severe vibration.
- The surrounding air is not contaminated by corrosive or flammable gases, water vapor, etc.

Technical specification

No.	Item		Unit	Data	
				FZN25–12DL/T630–20	FZRN25–12DL/T200–31.5
1	Rated voltage		KV	12	
2	Rated current		A	630	200
3	Rated frequency		HZ	50	
4	Rated insulation level	1 min power frequency withstand voltage	KV	Arc chamber between open contacts 30; To earth, phase to phase 42; Isolation between open contacts 48	
		Lightning impulse withstand voltage	KV	To earth, phase to phase 75; Isolation between open contact 85	
5	Rated short–time withstand current		KA	20	
6	Rated short circuit duration		S	4	
7	Rated peak withstand current		KA	50	
8	Rated active load breaking current		A	630	
9	Rated closed–loop breaking current		A	630	
10	Rated cable charging breaking current		A	10	
11	Rated breaking no–load transformer capacity		KVA	1600	
12	Rated short–circuit breaking current		KA	–	31.5
13	Rated transfer current		A		2000
14	Fuse type				SDLAJ–12、XPNT1–12
15	Impactor output energy		J		1+0.5
16	Rated short circuit closing current		KA		80 (Expected peak)
17	Earthing switch rated short–time withstand current		KA	20	
18	Earthing switch rated short circuit duration		S	2	
19	Earthing switch rated peak withstand current		KA	50	
20	Auxiliary circuit rated voltage		V	≦ 220V、≦ 110V	
21	Mechanical life		Times	10000	

Outline overall and installing dimensions

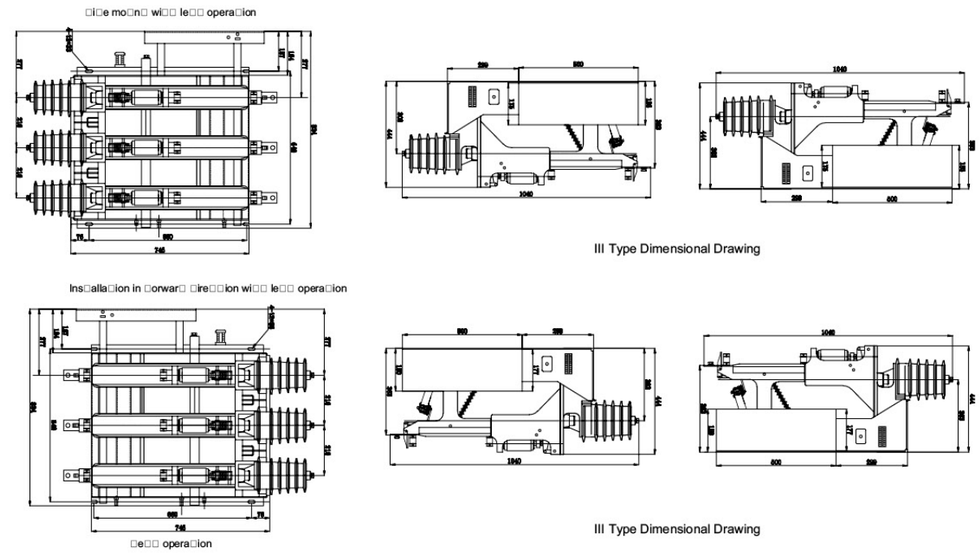

Note: There are three thicknesses of the operation box, which are divided into 184mm, 254mm, 284mm. It is decided by the design requirements of the switchgear.

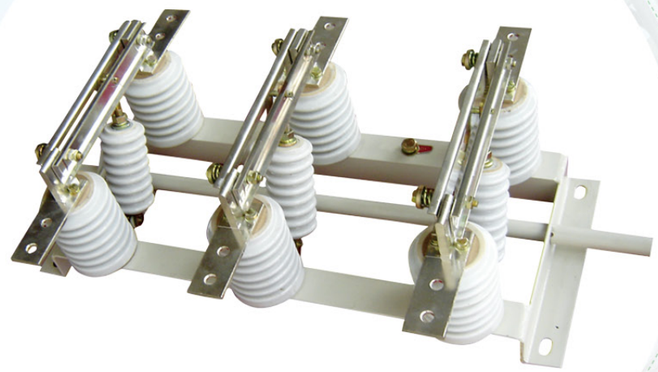

GN19-12

Indoor High Voltage Disconnector

General

GN19–12 indoor high–voltage isolating switch is a high–voltage switchgear for power systems with rated voltage of 12KV and AC 50HZ and below, with CS6–1 type manual operating mechanism. It can be used as opening and closing circuit when there is voltage without load. There are also derivative products, like anti–fouling type, high prototype and retro charging display device, etc.

This series of disconnector is a three–stage type, which consists of an under frame, a rotating shaft, and a lever, a porcelain post insulator, a knife switch and a wiring board. The rotating shaft is arranged on the under frame, and three pairs of levers are welded thereon, and the lever is connected to the knife switch through the pull rod porcelain insulator. The shaft extends out of the under frame and any of its sections can be connected to the operating mechanism. Type C is through–the–wall mode.Where C1 indicates that the rotation is on the wall side; C2 indicates that the breaking is on the wall side; C3 indicates that both sides are on the wall side.

Model Meaning

G N 19 – 12 (C) / □ – □

- Rated short–time withstand current (KA)
- Rated current (A)
- Through–the–wall mode
- Rated voltage (KV)
- Design number
- Indoor type
- Disconnector

Working Condition

- Altitude is not more than 1000m.
- Ambient air temperature: Max.+40℃; Min.–25℃.
- Air relative humidity: Daily average is not greater than 95%, monthly average is not greater than 90%.
- Earthquake intensity does not exceed 8 degree.
- Installation location: no fire, flammable, explosive, serious pollution, chemical corrosion and severe vibration.

Technical specification

No.	Item		Unit	Data							
1	Rated voltage		KV	12							
2	1 min power frequency withstand voltage	To earth	KV	42							
		Between open contacts	KV	48							
3	Lightning impulse withstand voltage(peak)	To earth	KV	75							
		Between open contacts	KV	85							
4	Rated frequency		HZ	50							
5	Rated current		A	400		630			1000 1250		
6	Rated short–time withstand current		KA	16	20	16	20	25	20	25	31.5
7	Rated peak withstand current		KA	40	50	40	50	63	50	63	80
8	Rated short–time withstand current duration main knife switch/ground knife switch		s	4/2							
9	Creepage distance		mm	300~380							
10	Mechanical life		Times	2000							

Outline overall and installing dimensions

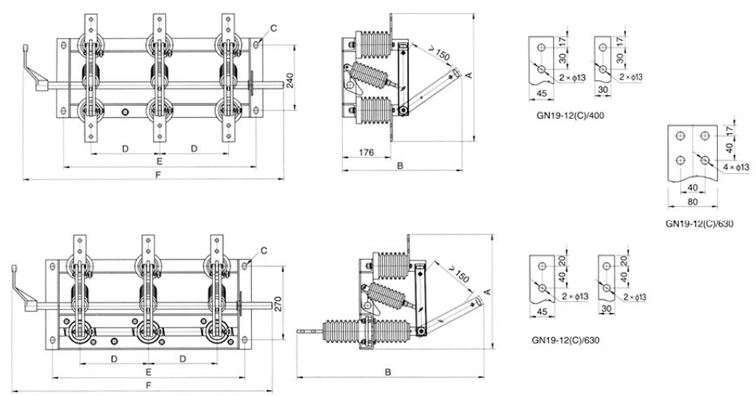

Product number	A	B	C	D			E			F		
GN19–12/400	450	436	4–14 × 24	210	230	250	620	660	700	870	900	940
GN19–12/630	490	436										
GN19–12/1000/1250	510	530	4–18 × 28									
GN19–12C/400	420	625	4–14 × 24									
GN19–12C/630	460	625										
GN19–12C/1000/1250	505	745	4–18 × 28									

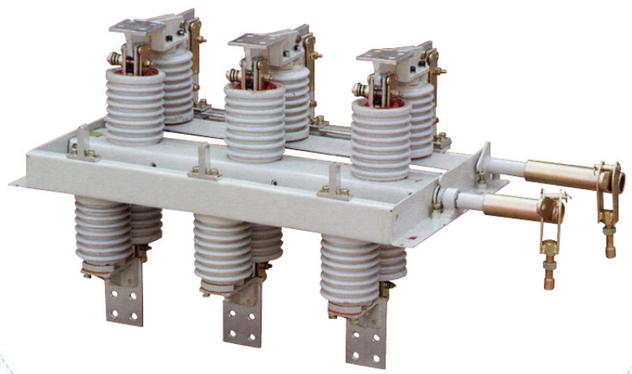

GN30-12

Indoor Rotary High Voltage Disconnector

General

GN30–12 indoor rotary high voltage disconnector is a new type with rotary knife. The main structural formula is to fix two sets of insulators and contacts on the upper and lower planes of the three–phase common low frame, realizing the opening and closing of the switch by rotating the knife.

GN3–12D switch adds a form of connecting knife on the basis of GN30–12 to meet the needs of different power systems. This product is compact in design, small in space, strong in insulation, easy to install and adjust. It meets the requirements of "AC high voltage isolating switch and earthing switch", and is applicable to indoor systems with rated voltage up to 10 KV AC 50 Hz and below. It can be used as opening and closing circuit when there is voltage and no load. It can be used with high voltage switchgear or can be used alone.

Model Meaning

G N 30 – 12 (D) / □ – □

- Thermal stability current (KA)
- Rated current (A)
- With earthing switch
- Rated voltage (KV)
- Design number
- Indoor type
- Disconnector

Working Condition

- Altitude is not more than 1000m.
- Air relative humidity: Daily average is not greater than 95%, monthly average is not greater than 90%.
- Earthquake intensity does not exceed 8 degree.
- Locations free of serious dust, chemical corrosive and explosive substances.
- Place without frequent and severe vibration.

Technical specification

Item \ Data / Model		GN30–12/400–12.5	GN30–12/630–20	GN30–12/1200–31.5	GN30–12/1250–31.5
		GN30–12D/400–12.5	GN30–12D/630–20	GN30–12/D1200–31.5	GN30–12D/1250–31.5
Rated voltage(KV)		2			
Rated current(A)		400	630	1000	1250
Thermally stable current (KV)		12.5	20	31.5	
Thermally stable time (s)		4			
Dynamic stable current (KV)		31.5	50	80	
Rated insulation level	Lightning impulse (KV)	Phase to phase, To earth 75, Between open contacts 85			
	1 min Power frequency (KV)	Phase to phase, To earth 42, Between open contacts 48			

Outline overall and installing dimensions

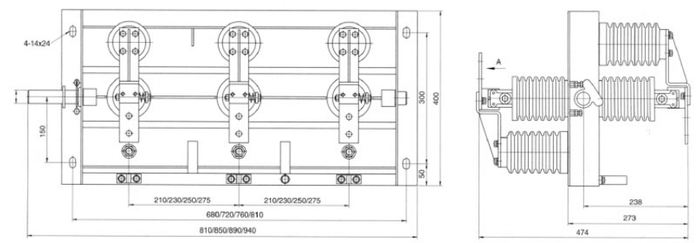

GN30-12/630-(20~25) Bottom isolation dimensional drawing (1)

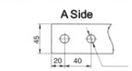

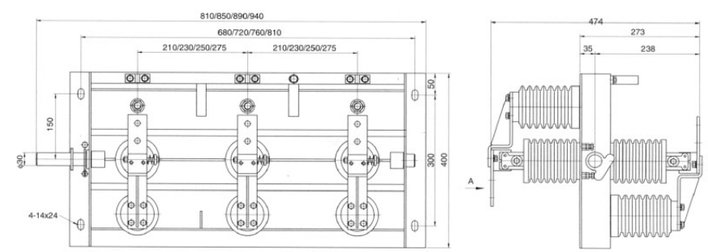

GN30-12/630-(20~25) Upper isolation dimensional drawing (2)

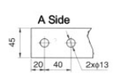

Product model and its meaning

ZN85(B) □ □ □ □ □ □ □ □ □

- Electrical blocking voltage
- Electrical lockout：B(yes)，W(No)
- door lockout ：Z(yes)，W(No)
- Middle door lockout：S(yes)，W(No)
- earthing connectors：J(yes)，W(No)
- S9 switch：F(auxiliary switch)，W(Micro Switch)，85B can only choose the auxiliary switch
- S8 switch：F(auxiliary switch)，W(Micro Switch)，85B can only choose the auxiliary switch
  Example: F32 (S8 is equipped with an auxiliary switch of 3 open and 2 close)
- Operation method：L= Operation on the left，M=Operation in the Middle
- Cabinet width
- Mechanism code

ZN85 Propulsion mechanism installation dimension drawing

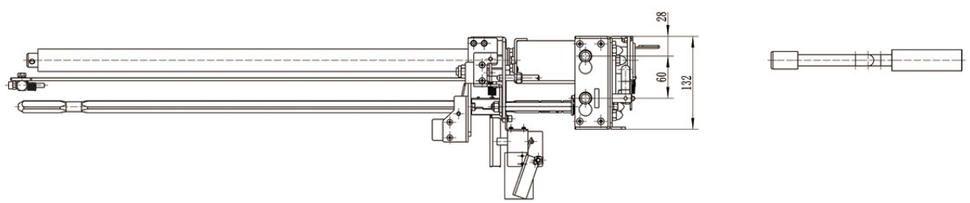

ZN85B Propulsion mechanism installation dimension drawing

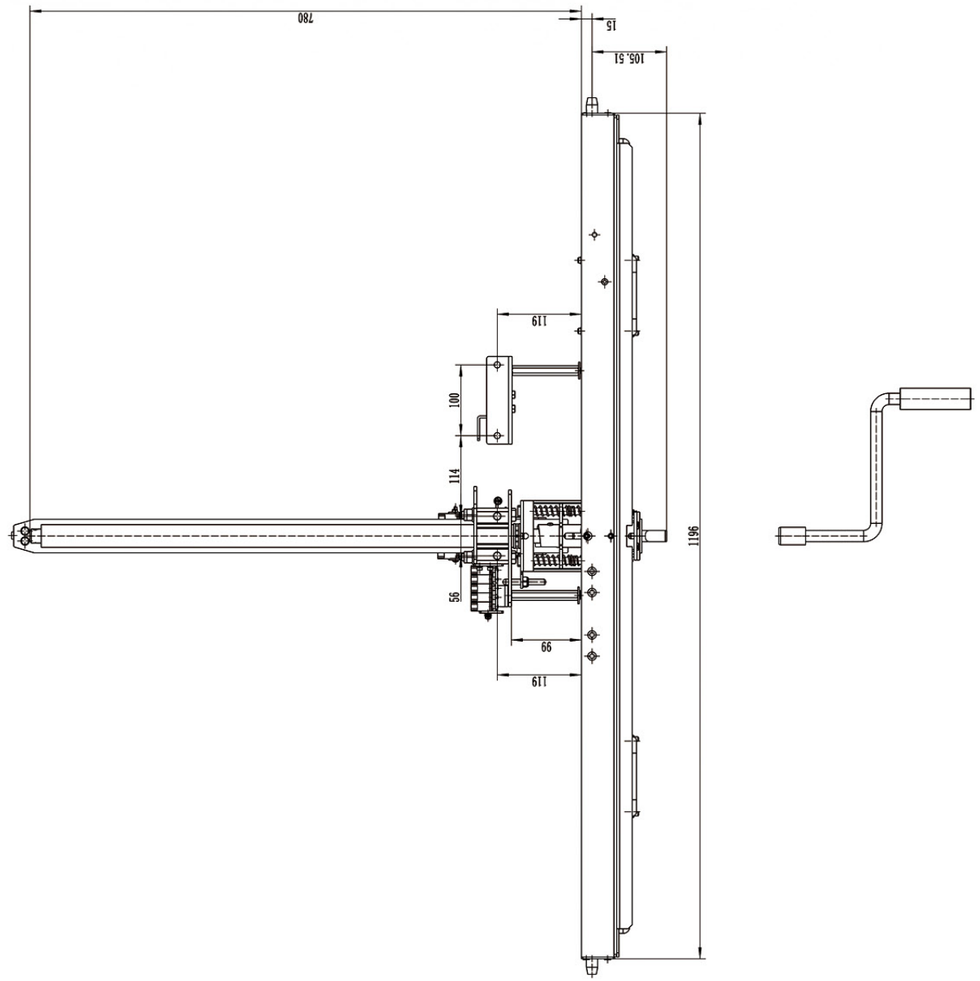

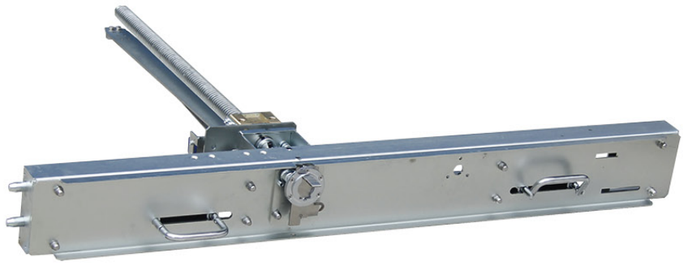

Outline overall and installing dimensions

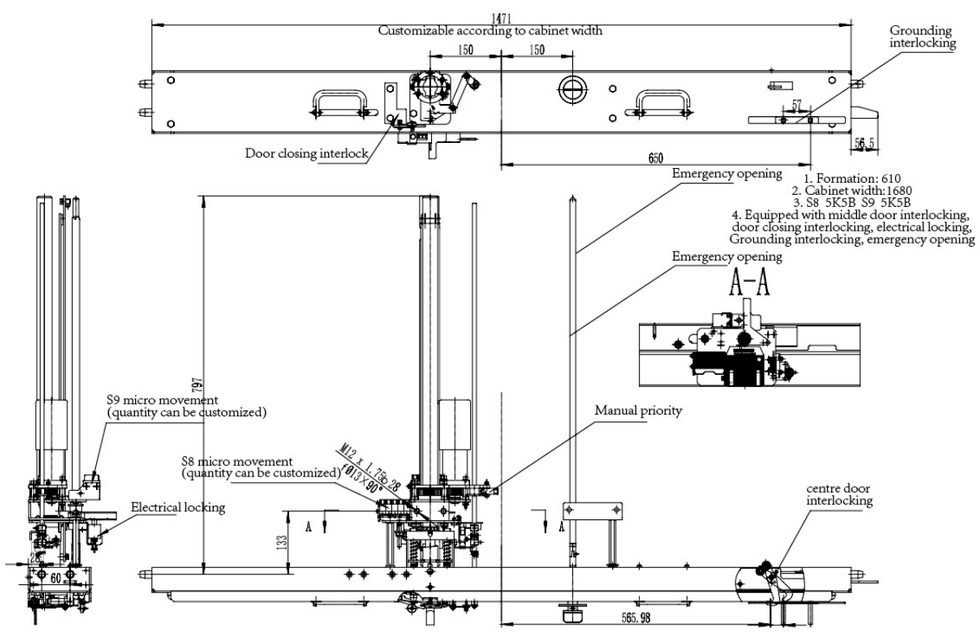

Outline overall and installing dimensions

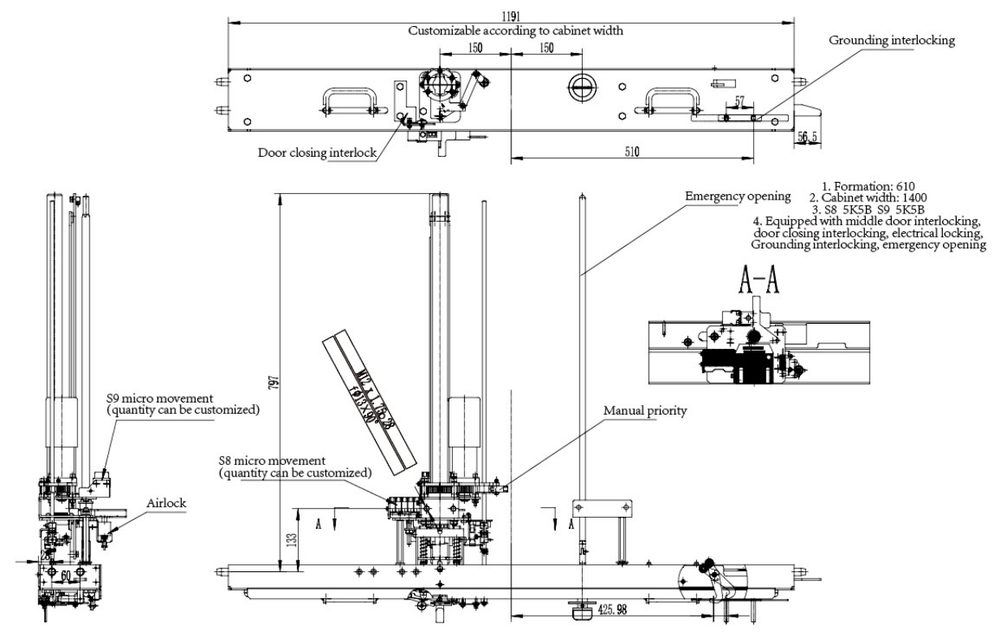

Embedded Pole for Circuit Breaker(611G)12kV

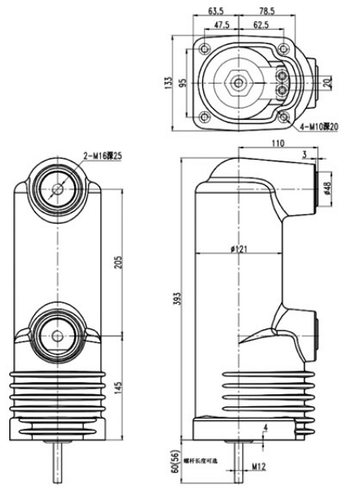

EP12–630–25、EP12/1250–25
EP12/1250–31.5

Technical parameters of main items

parameter name	parameter
Rated voltage	12kV
Rated current	630/1250A
Rated frequency	50Hz
Rated short–duration power frequency withstand voltage (1min)	48kV
Rated lightning impulse withstand voltage	85kV
Rated short–circuit breaking current	25/31.5kA
Rated peak withstand current	63/80KA
Rated short–circuit making current (peak value)	63/80KA
Rated short–circuit breaking current breaking times	30 times
Rated back–to–back capacitor bank breaking current*	400A
Rated single capacitor bank breaking current*	630A
Rated short–time withstand current	25/31.5kA
Mechanical life	30000 times
Contact self–closing force	100 ± 30N
Contact reaction force at rated opening distance	200 ± 30N
Loop resistance at lower limit of rated working pressure	≤ 25 μ Ω
Storage period	20 years
Contact allowable wear thickness	3mm
Moving part weight	≤ 2.5kg

Mechanical parameters of the matched vacuum switch

parameter name	parameter
Contact distance	9 ± 1mm
Rated contact travel	4 ± 1mm
Average opening speed	1.1 ± 0.2m/s
Average closing speed	0.6 ± 0.2m/s
Rated contact pressure	2000 ± 200N
Contact closing bounce time	≤ 2ms
Contact opening rebound amplitude	≤ 2mm
Different phases of opening and closing of contacts	≤ 1ms

Note: * is the rated value provided upon request

Embedded Pole for Circuit Breaker(612G)12kV

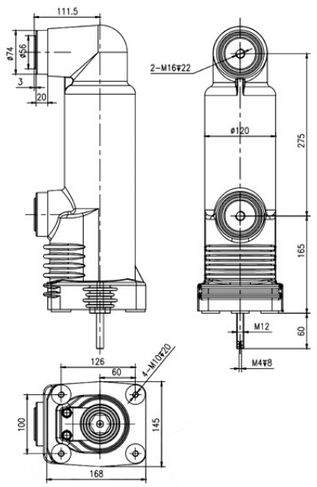

EP12–630–25
EP12/1250–25

Technical parameters of main items

parameter name	parameter
Rated voltage	12kV
Rated current	630A
Rated frequency	50Hz
Rated short–duration power frequency withstand voltage (1min)	48kV
Rated lightning impulse withstand voltage	85kV
Rated short–circuit breaking current	25kA
Rated peak withstand current	63KA
Rated short–circuit making current (peak value)	63KA
Rated short–circuit breaking current breaking times	30 times
Rated back–to–back capacitor bank breaking current*	400A
Rated single capacitor bank breaking current*	630A
Rated short–time withstand current	25kA
Mechanical life	30000 times
Contact self–closing force	100 ± 30N
Contact reaction force at rated opening distance	200 ± 30N
Loop resistance at lower limit of rated working pressure	≤ 25 μ Ω
Storage period	20 years
Contact allowable wear thickness	3mm
Moving part weight	≤ 2.5kg

Mechanical parameters of the matched vacuum switch

parameter name	parameter
Contact distance	9 ± 1mm
Rated contact travel	4 ± 1mm
Average opening speed	1.1 ± 0.2m/s
Average closing speed	0.6 ± 0.2m/s
Rated contact pressure	3000 ± 200N
Contact closing bounce time	≤ 2ms
Contact opening rebound amplitude	≤ 2mm
Three–phases out of phase	≤ 2ms

Note: * is the rated value provided upon request

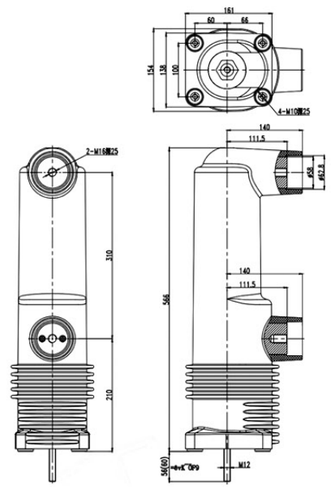

EP24/1250–31.5
EP24/1600–31.5

Technical parameters of main items

parameter name	parameter
Rated voltage	24kV
Rated current	1250/1600A
Rated frequency	50Hz
Rated short–duration power frequency withstand voltage (1min)	65/79kV
Rated lightning impulse withstand voltage	125kV
Rated short–circuit breaking current	31.5kA
Rated peak withstand current	80KA
Rated short–circuit making current (peak value)	80KA
Rated short–circuit breaking current breaking times	30 times
Rated back–to–back capacitor bank breaking current*	400A
Rated single capacitor bank breaking current*	630A
Rated short–time withstand current	31.5kA
Mechanical life	30000 times
Contact self–closing force	100 ± 30N
Contact reaction force at rated opening distance	200 ± 30N
Loop resistance at lower limit of rated working pressure	⩽ 25 μ Ω
Storage period	20 years
Contact allowable wear thickness	3mm
Moving part weight	⩽ 2kg

Mechanical parameters of the matched vacuum switch

parameter name	parameter
Contact distance	12 ± 1mm
Rated contact travel	4 ± 1mm
Average opening speed	1.1 ± 0.2m/s
Average closing speed	0.8 ± 0.2m/s
Rated contact pressure	2500 ± 200N
Contact closing bounce time	⩽ 2ms
Contact opening rebound amplitude	⩽ 2mm
Different phases of opening and closing of contacts	⩽ 2ms

Note: * is the rated value provided upon request

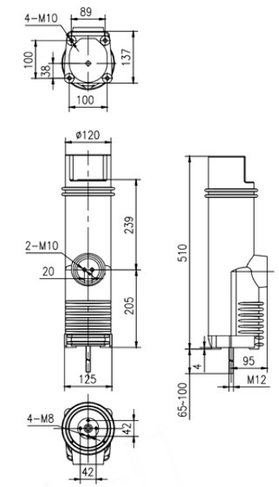

EP24/630–20
EP24/1250–25

Technical parameters of main items

parameter name	parameter
Rated voltage	24kV
Rated current	630/1250A
Rated frequency	50Hz
Rated short–duration power frequency withstand voltage (1min)	65/79kV
Rated lightning impulse withstand voltage	125kV
Rated short–circuit breaking current	20/25kA
Rated peak withstand current	50/63KA
Rated short–circuit making current (peak value)	50/63KA
Rated short–circuit breaking current breaking times	30 times
Rated back–to–back capacitor bank breaking current*	400A
Rated single capacitor bank breaking current*	630A
Rated short–time withstand current	25/31.5kA
Mechanical life	30000 times
Contact self–closing force	100 ± 30N
Contact reaction force at rated opening distance	200 ± 30N
Loop resistance at lower limit of rated working pressure	⩽ 25 μ Ω
Storage period	20 years
Contact allowable wear thickness	3mm
Moving part weight	⩽ 2kg

Mechanical parameters of the matched vacuum switch

parameter name	parameter
Contact distance	13 ± 1mm
Rated contact travel	4 ± 1mm
Average opening speed	1.1 ± 0.2m/s
Average closing speed	0.8 ± 0.2m/s
Rated contact pressure	2400 ± 200N
Contact closing bounce time	⩽ 2ms
Contact opening rebound amplitude	⩽ 2mm
Different phases of opening and closing of contacts	⩽ 2ms

Note: * is the rated value provided upon request

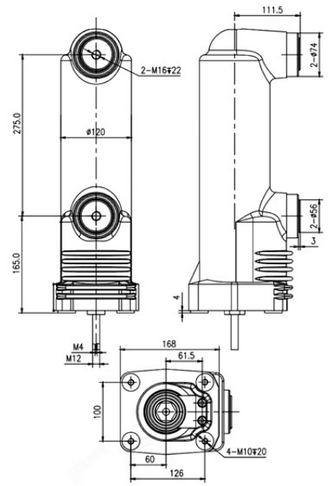

EP12/1250-31.5

Technical parameters of main items

parameter name	parameter
Rated voltage	12kV
Rated current	630A
Rated frequency	50Hz
Rated short-duration power frequency withstand voltage (1min)	48kV
Rated lightning impulse withstand voltage	85kV
Rated short-circuit breaking current	25kA
Rated peak withstand current	63KA
Rated short-circuit making current (peak value)	63KA
Rated short-circuit breaking current breaking times	30 times
Rated back-to-back capacitor bank breaking current*	400A
Rated single capacitor bank breaking current*	630A
Rated short-time withstand current	25kA
Mechanical life	30000 times
Contact self-closing force	100 ± 30N
Contact reaction force at rated opening distance	200 ± 30N
Loop resistance at lower limit of rated working pressure	≤ 25 μ Ω
Storage period	20 years
Contact allowable wear thickness	3mm
Moving part weight	≤ 2.5kg

Mechanical parameters of the matched vacuum switch

parameter name	parameter
Contact distance	9 ± 1mm
Rated contact travel	4 ± 1mm
Average opening speed	1.1 ± 0.2m/s
Average closing speed	0.8 ± 0.2m/s
Rated contact pressure	3000 ± 200N
Contact closing bounce time	≤ 2ms
Contact opening rebound amplitude	≤ 2mm
Different phases of opening and closing of contacts	≤ 1ms

Note: * is the rated value provided upon request

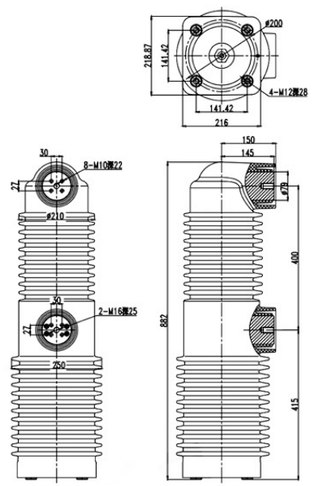

EP40.5/1600-25、EP40.5/2000-25
EP40.5/1600-31.5、EP40.5/2000-31.5

Technical parameters of main items

parameter name	parameter
Rated voltage	40.5kV
Rated current	1600/2000A
Rated frequency	50Hz
Rated short-duration power frequency withstand voltage (1min)	95kV
Rated lightning impulse withstand voltage	185kV
Rated short-circuit breaking current	25/31.5kA
Rated peak withstand current	80KA
Rated short-circuit making current (peak value)	80KA
Rated short-circuit breaking current breaking times	30 times
Rated back-to-back capacitor bank breaking current*	400A
Rated single capacitor bank breaking current*	630A
Rated short-time withstand current	25/31.5kA
Mechanical life	10000 times
Contact self-closing force	250 ± 60N
Contact reaction force at rated opening distance	340 ± 60N
Loop resistance at lower limit of rated working pressure	≤ 25 μ Ω
Storage period	20 years
Contact allowable wear thickness	3mm
Moving part weight	≤ 1.7kg

Mechanical parameters of the matched vacuum switch

parameter name	parameter
Contact distance	18 ± 1mm
Rated contact travel	4 ± 1mm
Average opening speed	1.7 ± 0.2m/s
Average closing speed	0.8 ± 0.2m/s
Rated contact pressure	3200 ± 200N
Contact closing bounce time	≤ 3ms
Contact opening rebound amplitude	≤ 2mm
Different phases of opening and closing of contacts	≤ 1ms

Note: * is the rated value provided upon request

YF-5-630A
(12 pieces)

Number of contacts: 12

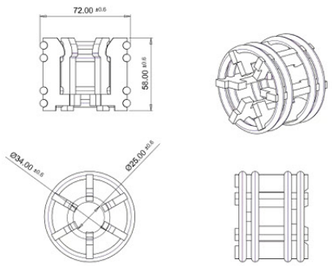

YF-5-630A
(24 pieces)

Number of contacts: 24

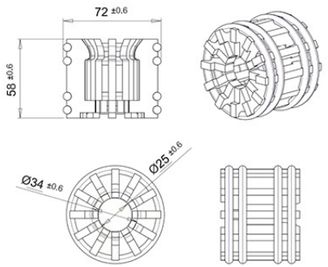

YF-5-1250A
(30 pieces)

Number of contacts: 30

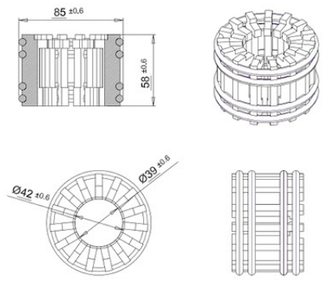

YF-5-1600A
(36 pieces)

Number of contacts: 36

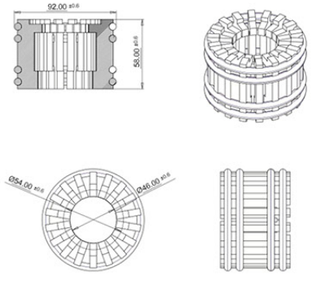

YF-5-2000A
(48 pieces)

Number of contacts: 48

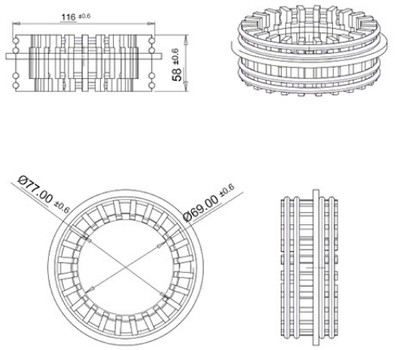

YF-5-2500A3150A
(64 pieces)

Number of contacts: 64

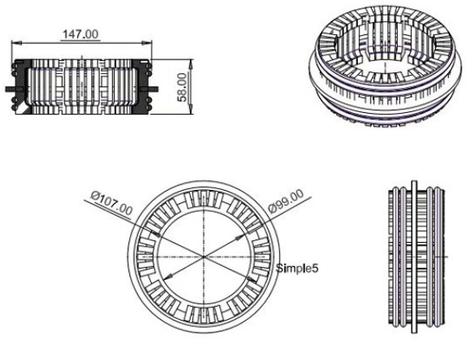

YF-5-4000A
(82 pieces)

Number of contacts: 82

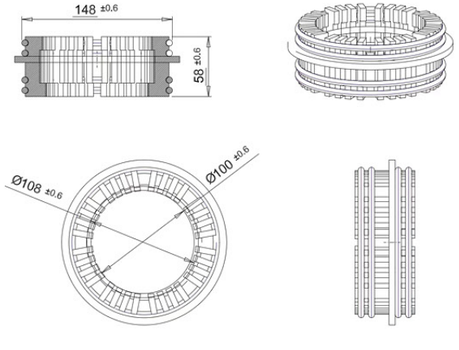

BT.12.108.1/108.2
VS1-12/630A

Name: Contact arm
Material: Copper/Aluminum

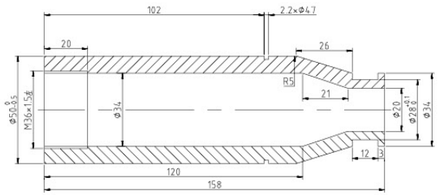

BT.12.109.1/109.2
VS1-12/1250A

Name: Contact arm
Material: Copper/Aluminum

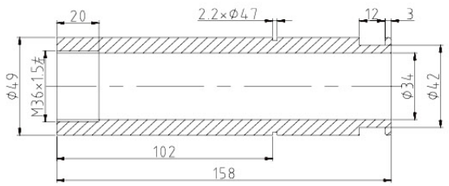

BT.12.110
VS1-12/1600A

Name: Contact arm
Material: Copper

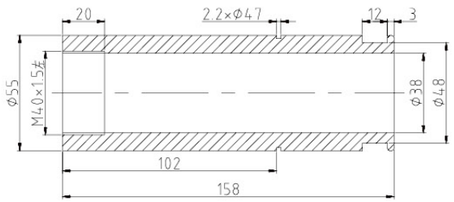

BT.12.111
VS1-12/1600A

Name: Contact arm
Material: Copper

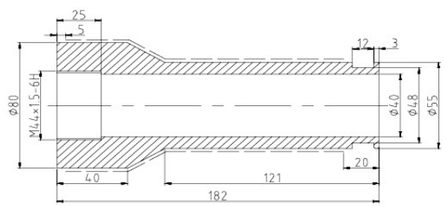

BT.12.112
VS1-12/2000A

Name: Contact arm
Material: Copper

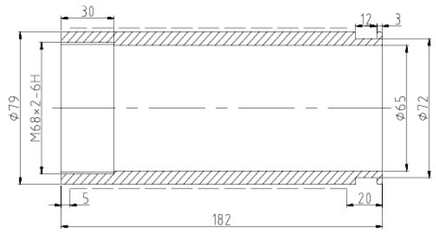

BT.12.113
VS1-12/2000A

Name: Contact arm
Material: Copper

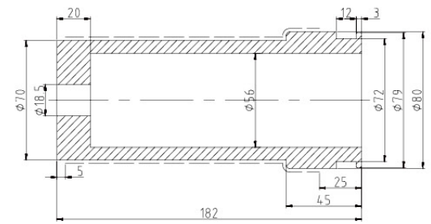

BT.12.114
VS1-12/2500A-3150A

Name: Contact arm
Material: Copper

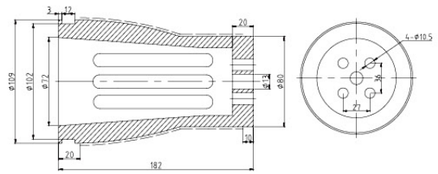

BT.12.115
VS1-12/4000A

Name: Contact arm
Material: Copper

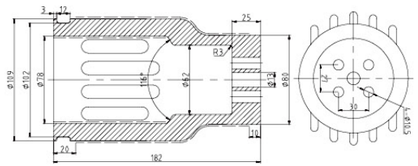

BT.12.116.1/116.2

VS1-12/630A

Name: Contact arm

Material: Copper/Aluminum

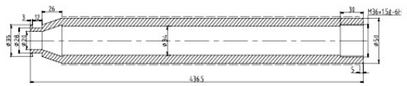

BT.12.117.1/117.2

VS1-12/1250A

Name: Contact arm

Material: Copper/Aluminum

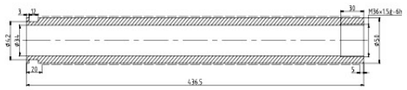

BT.12.118

VS1-12/1600A

Name: Contact arm

Material: Copper

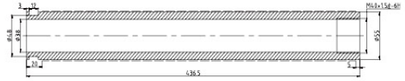

BT.12.119

VS1-12/2000A

Name: Contact arm

Material: Copper

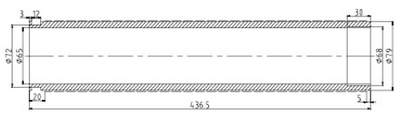

BT.12.120

VS1-12/2500A-3150A

Name: Contact arm

Material: Copper

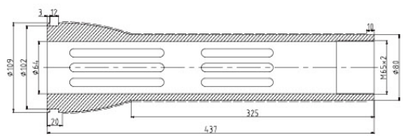

BT.12.121.1/121.2

VS1-12/630A

Name: Contact arm

Material: Copper/Aluminum

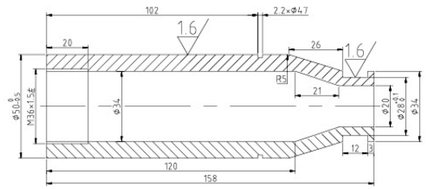

BT.12.122.1/122.2

VS1-12/1250A

Name: Contact arm

Material: Copper/Aluminum

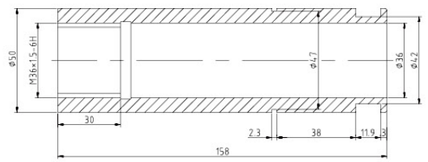

BT.12.123

VS1-12/1600A

Name: Contact arm

Material: Copper

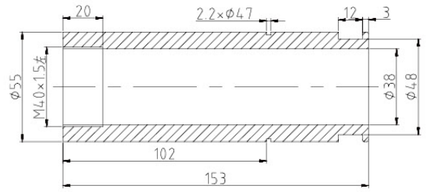

BT.12.124

VS1-12/2000A

Name: Contact arm

Material: Copper

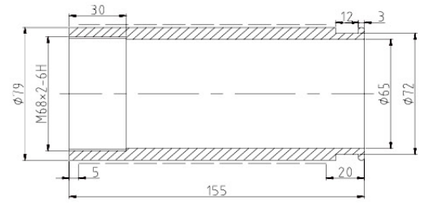

BT.12.125

VS1-12/200A

Name: Contact arm

Material: Copper

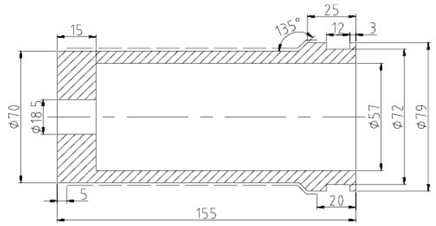

BT.12.126

VS1-12/2500A-3150A

Name: Contact arm

Material: Copper

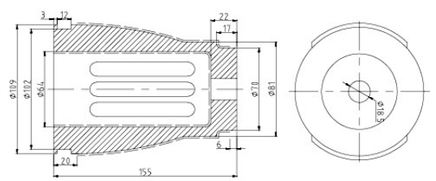

BT.12.127

VS1-12/3150A

Name: Contact arm

Material: Copper

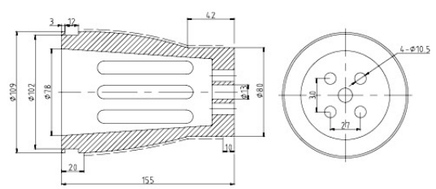

BT.12.128

VS1-12/4000A

Name: Contact arm

Material: Copper

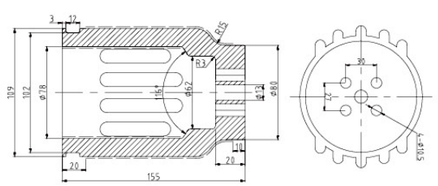

CHYF®

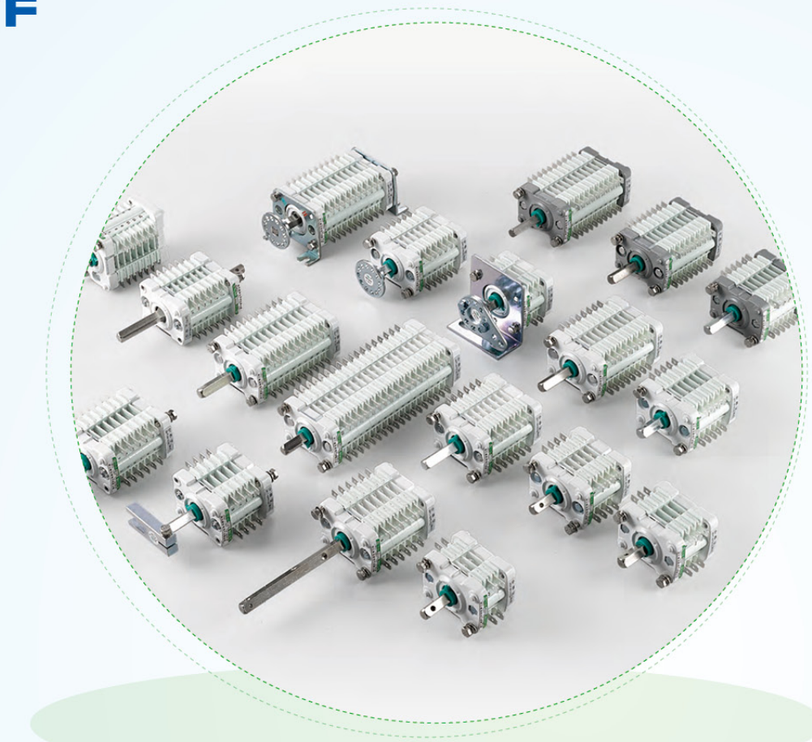

F10

auxiliary switch

General

This product is one of the supporting components of high–voltage switchgear, suitable for controlling the closing, opening, interlocking, and signal circuits of various high–voltage switch operating mechanisms, and can also be used as a conversion or combination switch.

Model meaning

F 10 – □□ □ / □ □ 2 – Y □ □

- Delay contact pair number (quick opening without delay contact)
- Delay contact type (A, B, C, D, E)
- With delay contact
- bipolar
- type code
- Installation method: W means horizontal; L means vertical
- Structural form: " Ⅰ " means with quick splitter (quick splitter);
  " Ⅲ " means without quick splitter (slow splitter) static contact pair number
- Number of fixed contacts
- Design Number
- auxiliary switch

Note: There are two sets of normal contacts, and the section with delay can only have one set of contacts.

Applicable working conditions

The altitude does not exceed 3000 meters;
Ambient temperature: –40℃ ~+40℃ ;
Relative humidity: the daily average value is not greater than 95%, the monthly average value is not greater than 90%;
the vibration acceleration is not greater than 15 m/s^2;
The surrounding medium has no explosion hazard, no conductive dust, no damaged insulation and no gas place that corrodes metal.

Technical parameter

term	DC		AC
Rated voltage (V)	110	220	220,380
Rated current (A)	6	5	10
Rated maximum breaking current (A)	6	5	10
	Time constant t=20ms		220V,cos Φ =0.4
Life times	20000		20000

F10 series auxiliary switch contact numbers

Number	1	2	3	4	5	6	7	8	9	10
Contact number (normally open)	1–3	5–7	9–11	13–15	17–19	21–23	25–27	29–31	33–35	37–39
Contact number (normally closed)	2–4	6–8	10–12	14–16	18–20	22–24	26–28	30–32	34–36	38–40

◆ Classification of aluminum color (silver gray, white), electroplating process (silver plating, gold plating) ◆ Can be customized according to customer needs.

Order information

1. Product name, model, quantity
2. Indicate the number of contact pairs and switch joints, type and installation method
3. Whether to choose connection accessories
4. If the user has other special requirements, please explain

F10–8 Ⅲ /LD(white aluminum silver)

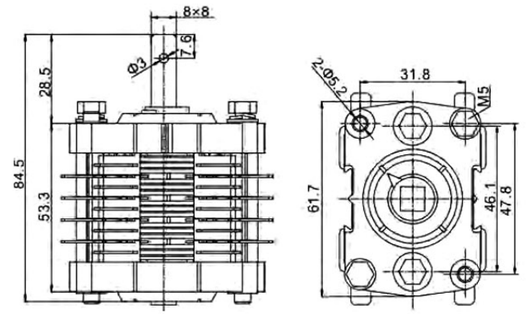

F10–12 Ⅲ /LBJ(white aluminum silver)

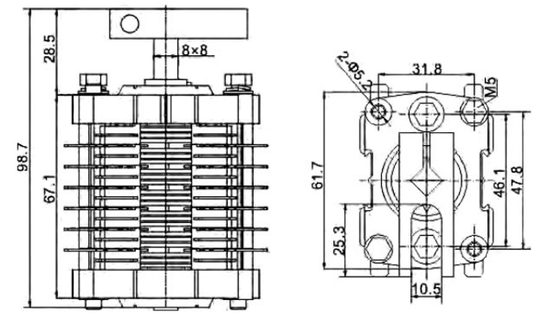

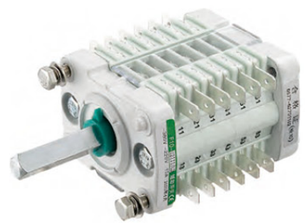

F10–12 Ⅲ /LD(white aluminum silver)

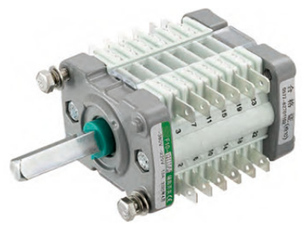

F10–12 Ⅲ /LD(gray aluminum silver)

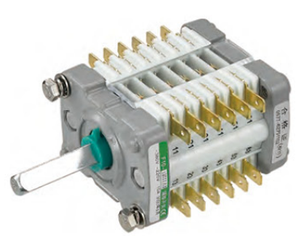

F10–12 Ⅲ /LD(gray aluminum gold)

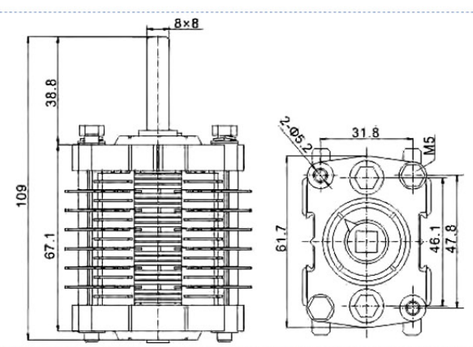

F10–10 Ⅲ /LD(white aluminum silver)

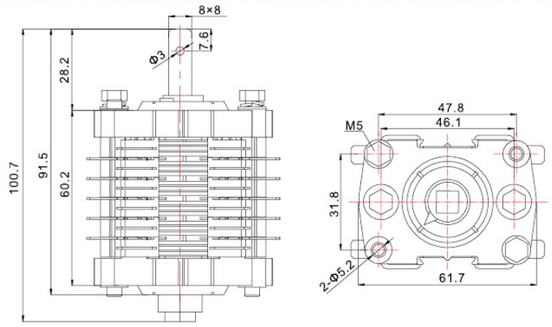

F10–12 Ⅲ /LB(white aluminum silver)

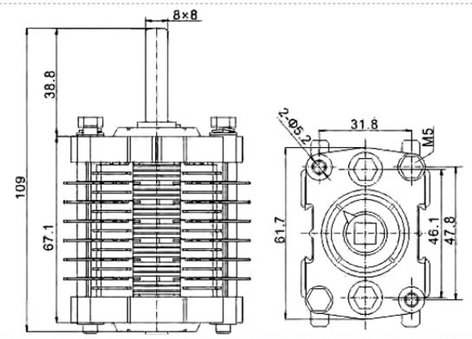

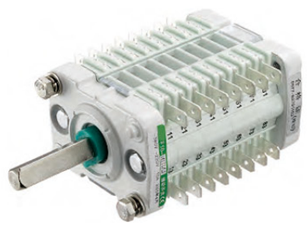

F10–16 Ⅲ /LD(white aluminum silver)

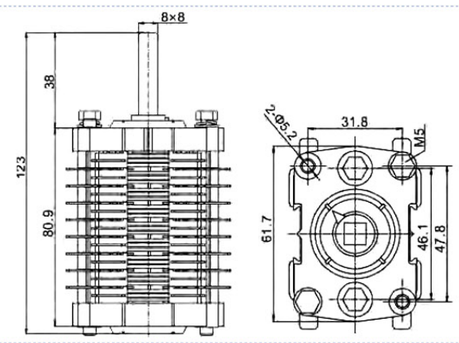

F10–12 Ⅲ /LD(white aluminum silver)

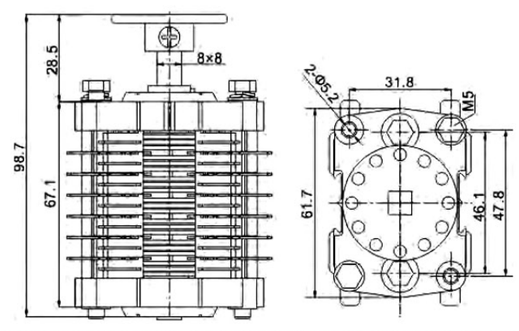

FK10– Ⅱ –22

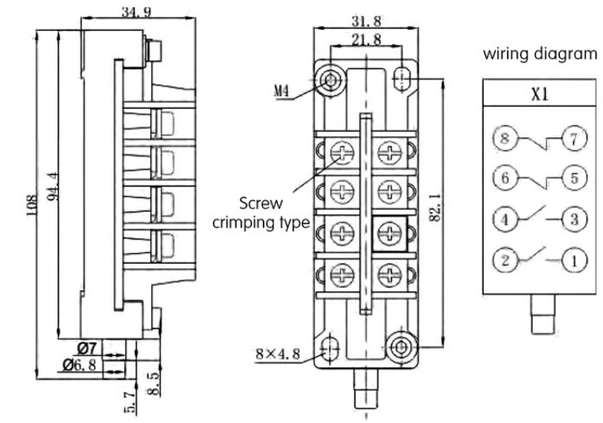

FK10– Ⅱ –32

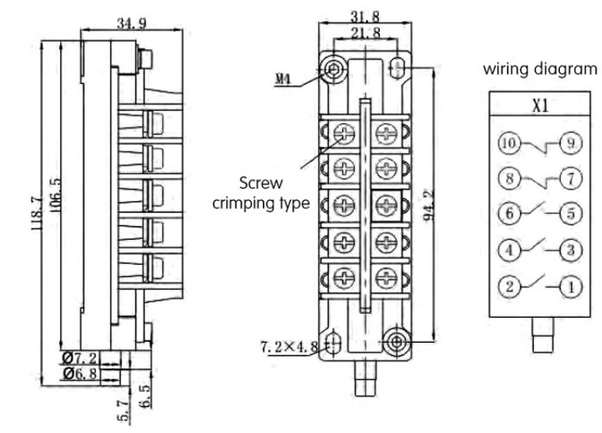

FK10– Ⅱ –33

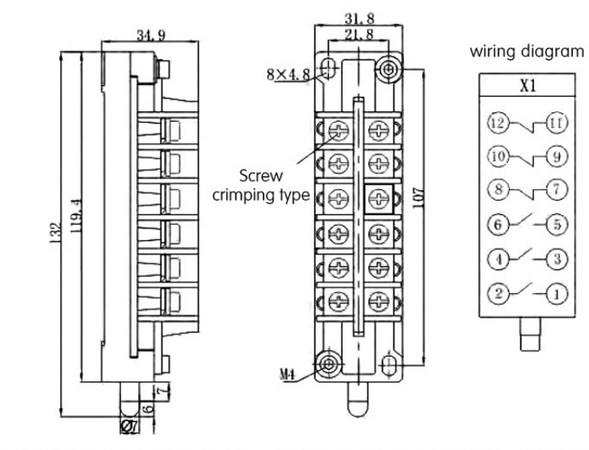

FK10– Ⅱ –44

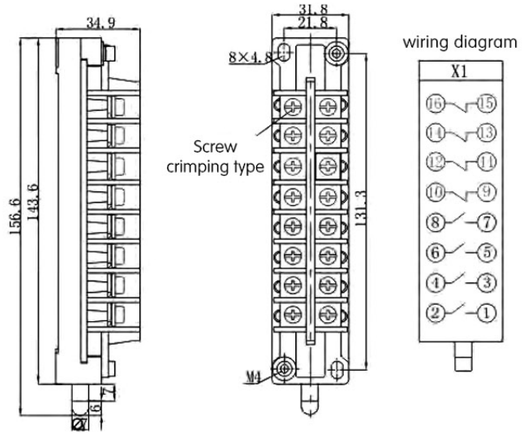

FK10– Ⅱ –55A

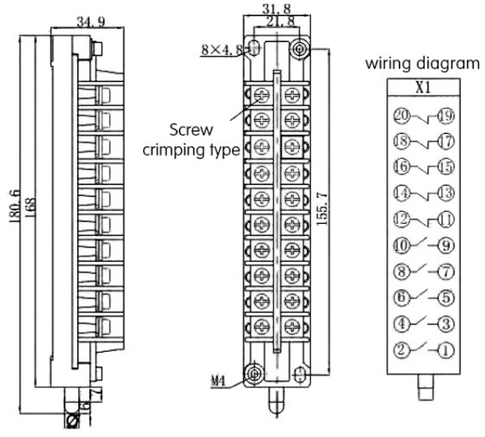
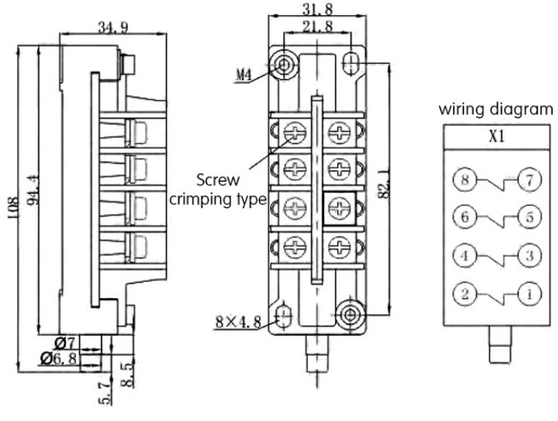
FK10– Ⅱ –04